CNC Foundation

Student Guide

Oracle Internal & OAI Use Only

D17597GC10
1.0
December 2004
D41078

ORACLE®

Copyright © 2004, 2005, Oracle. All rights reserved.

This document contains proprietary information and is protected by copyright and other intellectual property laws. You may copy and print this document solely for your own use in an Oracle training course. The document may not be modified or altered in any way. Except where your use constitutes "fair use" under copyright law, you may not use, share, download, upload, copy, print, display, perform, reproduce, publish, license, post, transmit, or distribute this document in whole or in part without the express authorization of Oracle.

The information contained in this document is subject to change without notice. If you find any problems in the document, please report them in writing to: Oracle University, 500 Oracle Parkway, Redwood Shores, California 94065 USA. This document is not warranted to be error-free.

If this documentation is delivered to the United States Government or anyone using the documentation on behalf of the United States Government, the following notice is applicable:

U.S. GOVERNMENT RIGHTS
The U.S. Government's rights to use, modify, reproduce, release, perform, display, or disclose these training materials are restricted by the terms of the applicable Oracle license agreement and/or the applicable U.S. Government contract.

Oracle, JD Edwards, and PeopleSoft are registered trademarks of Oracle Corporation and/or its affiliates. Other names may be trademarks of their respective owners.

Oracle Internal & OAI Use Only

CONTENTS

Preface **CNC Foundation** ..... **v**
Typographical Conventions and Visual Cues v

Lesson 1 **Course Overview** **1**
Agenda: Day 1 2
Agenda: Day 2 3

Lesson 2 **Technology Overview** **5**
Describing CNC 6
Describing Advantages of CNC 7
Describing CNC Fundamentals 12
Describing How to Find Information About CNC in PeopleBooks 23

Lesson 3 **Creating Path Codes** **27**
Describing Path Code Setup 28
Creating Path Codes 32
Activity 1: Troubleshooting Path Code Definitions 36

Lesson 4 **Creating Data Sources** **39**
Describing Data Sources 40
Activity 2: Defining Data Source Terms 44
Describing Database Structures 45
Creating Data Sources 55
Activity 3: Creating A Data Source 58
Activity 4: Troubleshooting Data Source Definitions 59

Lesson 5 **Setting Up Environments** **61**
Describing Environments 62
Creating Environments 65
Activity 5: Setting Up Environments 68

Lesson 6 **Using Object Configuration Manager** **71**
Defining OCM 72
Illustrating OCM 76
Running OCM Reports 79
Activity 6: Using OCM 81

Lesson 7 **Defining Middleware** **83**
Defining Middleware 84
Describing User Security 100
Describing Data and Logic Requests 104

Oracle Internal & OAI Use Only

Lesson 8 **Describing a Typical CNC Setup 107**
Describing a Typical Customer Configuration 108

Lesson 9 **Final Course Activity 119**
Activity 7: Using Distributed Processing 120

Lesson 10 **Course Review 121**
Describing CNC 122
Implementing the Elements of CNC 123
Demonstrating Competence in CNC Architecture 124

Appendix A **PeopleSoft EnterpriseOne Curriculum Map 125**

Appendix B **Applying CNC Concepts 145**
Configuration and Mappings Worksheets 145

Oracle Internal & OAI Use Only

Preface

CNC Foundation

Typographical Conventions and Visual Cues

This section discusses:

- Typographical conventions.
- Visual cues.

Typographical Conventions

This table contains the typographical conventions that are used in this guide:

Typographical Convention	*Description*
Bold	Indicates PeopleCode function names, method names, language constructs, and PeopleCode reserved words that must be included literally in the function call.
Italics	Indicates field values, emphasis, and PeopleSoft or other book-length publication titles. In PeopleCode syntax, italic items are placeholders for arguments that your program must supply. We also use italics when we refer to words as words or letters as letters, as in the following: Enter the letter *O*.
`Monospace font`	Indicates a PeopleCode program or other code example.
“ ” (quotation marks)	Indicate lesson and chapter titles in cross-references and words that are used differently from their intended meanings.

Visual Cues

Training courses contain the following visual cues.

Notes

Notes indicate information that you should pay particular attention to as you work with the PeopleSoft system.

Note. Example of a note.

If the note is preceded by *Important!,* the note is crucial and includes information that concerns what you must do for the system to function properly.

Oracle Internal & OAI Use Only

Important! Example of an important note.

Warnings

Warnings indicate crucial configuration considerations. Pay close attention to warning messages.

Warning! Example of a warning.

Cross-References

Training guides provide cross-references either under the heading "See Also" or on a separate line preceded by the word *See.* Cross-references lead to other documents, such as PeopleBooks, that are pertinent to the immediately preceding documentation.

Example:

See *PeopleSoft 8.4 Enterprise Portal PeopleBook,* "Handling Portal Administration Data."

Example of cross-reference to a PeopleBook

Oracle Internal & OAI Use Only

Lesson 1

Course Overview

Objectives

By the end of this course, you will be able to:

- Describe Configurable Network Computing (CNC).
- Implement the elements of CNC.
- Demonstrate competence in CNC architecture.

Slide 3

Student Notes

Oracle Internal & OAI Use Only

Agenda: Day 1

On day one, we will provide an overview of CNC foundation and present these topics:

- Creating path codes.
- Creating data sources.

Slide 4

Student Notes

Oracle Internal & OAI Use Only

Agenda: Day 2

On day two, we will discuss these topics:

- Setting up environments.
- Using Object Configuration Manager.
- Defining middleware.
- Describing a typical CNC setup.
- Applying CNC concepts.

Slide 5

Student Notes

Oracle Internal & OAI Use Only

Notes

Oracle Internal & OAI Use Only

Lesson 2

Technology Overview

Objectives

By the end of this lesson, you will be able to describe:

- Configurable Network Computing (CNC).
- Advantages of CNC.
- CNC Fundamentals.
- How to find information about CNC in PeopleBooks.

Slide 7

Student Notes

Oracle Internal & OAI Use Only

Describing CNC

Definition of CNC

CNC:

- Is a technical architecture that allows customizable, distributed applications to run on different platforms without users being aware of which platforms or databases are involved in any given task.
- Insulates the business solution from the underlying technology allowing enterprises to grow and adopt new technologies without rewriting applications.

Slide 8

Student Notes

CNC Components

Component	*Description*
Design Tools	EnterpriseOne software provides a unified set of tools to create all interactive applications, batch applications, and reports.
Applications	EnterpriseOne software provides the interactive and batch applications that perform your business needs. For example, the Purchase Order Entry and General Ledger Post programs are applications.
Foundation Code	EnterpriseOne software provides underlying core processing that both interactive and batch applications depend on in order to run.
Middleware	EnterpriseOne software provides middleware that insulates your applications from the underlying database, operating system, hardware, messaging systems, and telecommunications protocols. Middleware insulates your business solution from the platform technology.

Advantages

The CNC architecture provides these advantages:

- Network-centric software.
- Flexible, leveraged technology.
- Worldwide business support.
- Custom solutions without consequences.

Oracle Internal & OAI Use Only

Describing Advantages of CNC

Network-Centric Software

Network-centric software enables you to create a uniform interface that supports a multiple-platform network.

This compatibility across platforms provides:

- Immediate availability.
- EnterpriseOne platform-neutral business specifications.
- Support for internet technology.

Slide 9

Student Notes

Immediate Availability

Applications across the network reflect changes to these items:

- Business objects.
- Business rules.
- Processing modes.
- Hardware and databases.

EnterpriseOne Platform-Neutral Business Specifications

EnterpriseOne platform-neutral business specifications, also called middleware, include a common set of application program interfaces that integrates multiple-vendor, multiple-protocol differences.

This integration insulates developers from the need to program to a specific platform.

Oracle Internal & OAI Use Only

Describing Advantages of CNC (continued)

Flexible, Leveraged Technology

Flexible and leveraged technology includes:

- Application building.
- Business processes.
- Information processing.
- A common interface.

Slide 10

Student Notes

Leveraged Technology

You create applications using tools that do not require a developer with a mastery of a programming language. EnterpriseOne tools conceal the code and enable the developer to concentrate on creating applications that are specific to current business needs and that accommodate changes to business rules without reprogramming the application source code.

EnterpriseOne is object-based and event-driven to provide you with more efficient business processes. Developers can reuse objects among applications for different purposes. This reusability provides consistency throughout all EnterpriseOne applications. It also enables an intuitive understanding of functionality for end users. The functionality of an object (field or other control) in one application is the same in a different application. This consistency reduces training time and efficiency for end users.

EnterpriseOne does not rely on one command or keystroke to process information; rather, it processes information at strategic moments during the use of an application. For example, when a user moves among fields on a form, the system processes the information at the moment when the cursor leaves the field. EnterpriseOne immediately notes errors and hides processing, such as an update of tables that might also store information for the field, when the user moves to the next field on a form.

In addition, EnterpriseOne provides a common interface between applications. When you move from form to form, you see the same general setup.

Oracle Internal & OAI Use Only

Describing Advantages of CNC (continued)

Worldwide Business Support

EnterpriseOne provides support for:

- Mixed currency.
- Languages.
- Execution on multiple platforms.

Slide 11

Student Notes

Scalability

You can run EnterpriseOne on various platforms—from servers to laptops. This scalability enables a traveling consultant to access the system and enter records. The consultant can then send the updated records over the internet to keep tables as current as possible.

Oracle Internal & OAI Use Only

Describing Advantages of CNC (continued)

Custom Solutions Without Consequences

You can customize these areas in EnterpriseOne without consequences during an upgrade:

- Vocabulary overrides.
- User overrides.
- Versions.
- Processing options.
- Code generator options.

Slide 12

Student Notes

Custom Solutions Without Consequences

You can create custom solutions to business applications with few or no consequences when you upgrade to a new release of EnterpriseOne. The EnterpriseOne toolset enables you to transform a concept into a viable business solution. You maintain consistency throughout your enterprise, retain flexibility to adapt to changing business requirements, and minimize the time required to implement upgrades.

Oracle Internal & OAI Use Only

Describing Advantages of CNC (continued)

Recommendations for CNC Computing

These guidelines are recommended for CNC computing:

- Minimize the number of computers on your network.
- Use a homogeneous network.
- Use batch processing as often as possible.
- Use data warehousing for reports.
- Use the real-time processing mode only for low-volume data entry.
- Create a multitiered network.
- Use a separate server for each product family.

Slide 13

Student Notes

Recommendations for CNC Computing

Distributed processing involves configuring executable application components in various modes of operations and configuring data tables that the application components require.

You can dynamically configure application components and data tables. This process provides the most flexibility during the configuration of your enterprise.

The key to achieving a high level of performance and seemingly boundless scalability is the dynamic configuration of both hardware and software. However, the extensive flexibility and number of options sometimes appears contradictory and confusing.

Oracle Internal & OAI Use Only

Describing CNC Fundamentals

CNC Architecture

The fundamentals of the CNC architecture include:

- Objects.
- Object storage.
- Object deployment.
- Environments.
- Path codes.
- Object Configuration Manager (OCM).
- Data sources.

Slide 14

Student Notes

Fundamentals of CNC Architecture

Each of these fundamentals will be discussed in detail throughout the course.

Oracle Internal & OAI Use Only

Describing CNC Fundamentals (continued)

Definition of Objects

An object is an independent, self-contained package of data and its individual processing functions.

Objects are the fundamental building blocks of EnterpriseOne applications.

Slide 15

Student Notes

Object Types

EnterpriseOne object types include:

- APPL - interactive application.
- UBE - batch application or report.
- BSVW - business view.
- TBLE - table.
- BSFN - business function.
- DSTR - data structure.
- BL - business library.
- GT - generic text.

Oracle Internal & OAI Use Only

Describing CNC Fundamentals (continued)

Object Storage

EnterpriseOne provides these three storage formats:

- Central objects.
- Replicated objects.
- Serialized objects.

Slide 16

Student Notes

Central Objects

You store objects in a central location to enable:

- Deployment.
- Redeployment.
- Development.

Central objects consist of object specifications for each EnterpriseOne object and C components for code-generated objects. Store the central object specifications in a relational database on either a deployment server or an enterprise server, depending on available resources. Store C components for code-generated objects in directories on the deployment server.

Replicated Objects

You create replicated objects from central objects. You store a set of replicated objects in a directory on each development workstation, enterprise logic server, or both. At runtime, EnterpriseOne requires the specifications of the object that the workstation or enterprise logic server processes.

Serialized Objects

Web clients use serialized objects at runtime. To generate serialized objects for the Java server, developers must install and use the eGenerator, a PeopleSoft tool that turns EnterpriseOne specifications into Java code, which enables you to access EnterpriseOne applications in HTML. The EnterpriseOne forms and applications that you generate using the tool are HTML objects. EnterpriseOne stores the objects in a database and retrieves them at runtime.

Oracle Internal & OAI Use Only

Describing CNC Fundamentals (continued)

Object Storage

This diagram shows the object storage relationship:

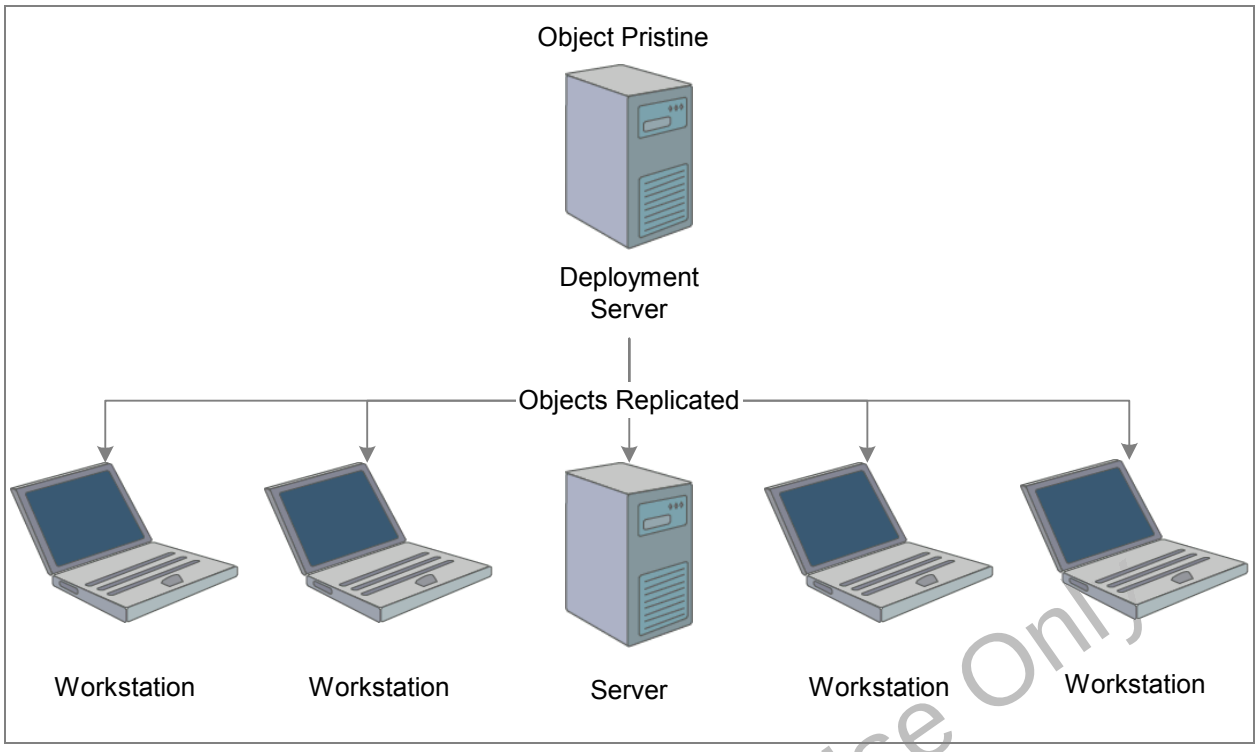

Slide 17

Student Notes

Object Replication

Central objects are stored on the deployment server in a relational database format. These objects are then replicated down to any enterprise servers and development workstations that will be running EnterpriseOne. The replicated objects are stored in a runtime format.

Oracle Internal & OAI Use Only

Describing CNC Fundamentals (continued)

Object Deployment

This diagram shows the object deployment model:

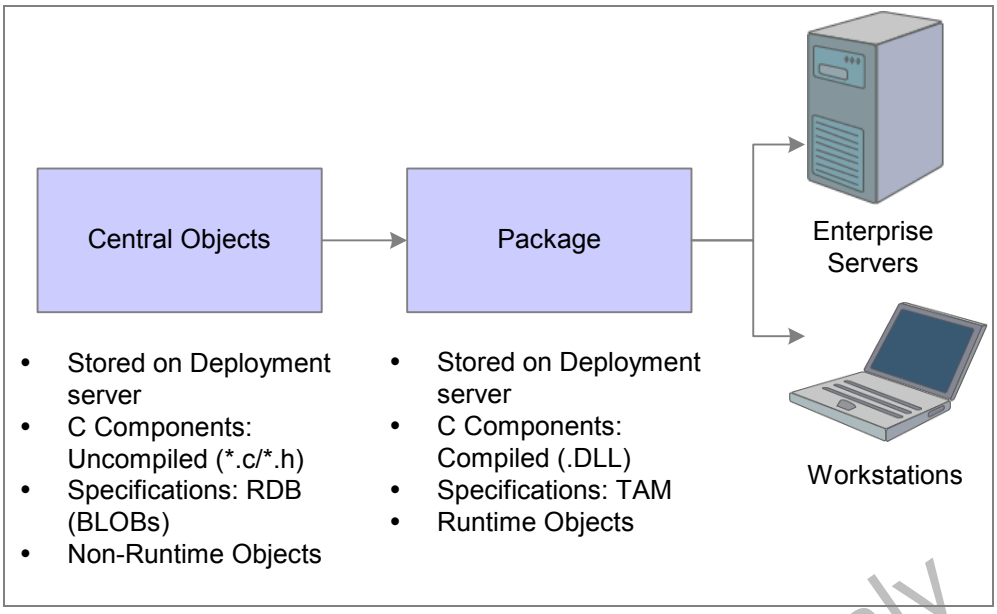

Slide 18

Student Notes

Object Deployment

You use central objects to build a set of replicated objects within packages. Full packages contain all EnterpriseOne objects. Update packages contain only selected or modified objects. After assembling and building a package, you deploy it to any machine that executes EnterpriseOne logic. It can be deployed to both servers and client workstations using various deployment methods.

Oracle Internal & OAI Use Only

Describing CNC Fundamentals (continued)

Definition of Environments

An EnterpriseOne environment is a collection of pointers that indicate the location of data and EnterpriseOne software objects.

Slide 19

Student Notes

Environments

EnterpriseOne provides an environment as a pointer to data and logic objects. An environment answers the following questions:

Where is my data?

Which machine will process my logic?

Which directory contains the object being processed?

Oracle Internal & OAI Use Only

Describing CNC Fundamentals (continued)

Definition of Path Code

A path code defines a specific set of EnterpriseOne objects by associating a C component storage area (directory) with a corresponding set of object specifications (RDB):

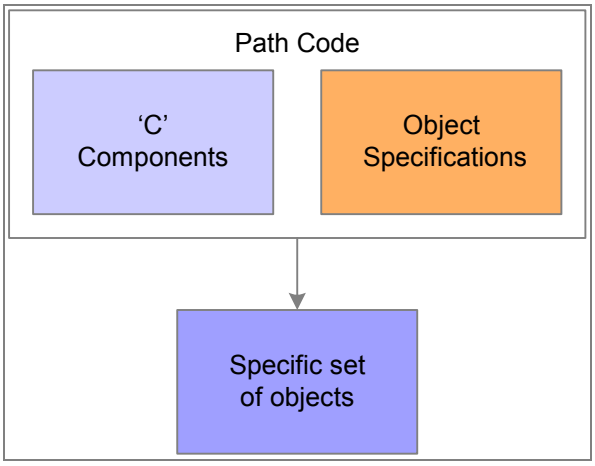

Slide 20

Student Notes

Path Codes

A path code includes C components and specifications.

A path code can refer to the central development objects on the deployment server or to replicated objects on a workstation or logic server.

A path code exists for each unique set of central objects. For example, you might have a set of objects reserved for software updates that you can deploy to users and a set of objects that you reserve for major enhancements.

A set of objects or the path code can reside in these locations:

Location	***Definition***
Central server	Contains the central set of development objects specifications. All development occurs in this location. The path code connects the specifications and the C components on the deployment server.
Development workstation	Contains a replicated set of objects that EnterpriseOne uses at runtime.
Logic server	Contains a replicated set of objects that EnterpriseOne uses to process logic on these servers.

Oracle Internal & OAI Use Only

The Library List Master File table (F0094) contains path codes that track a set of objects and their location within EnterpriseOne.

Oracle Internal & OAI Use Only

Describing CNC Fundamentals (continued)

OCM Definition

OCM is a tool that configures distributed processing and distributed data at runtime without requiring programming:

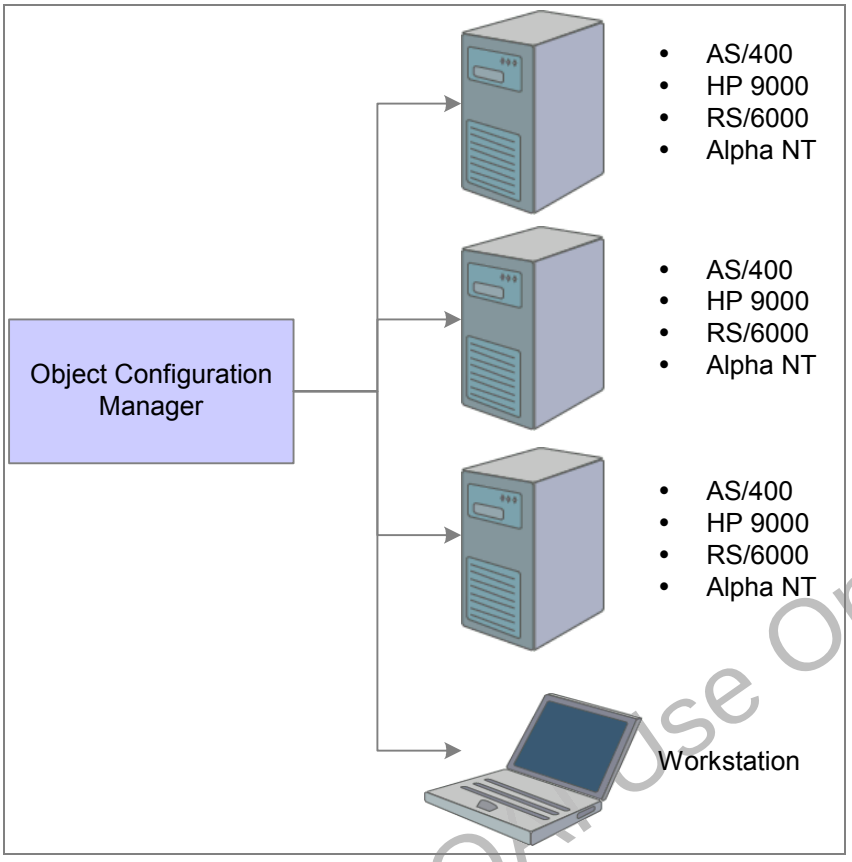

Slide 21

Student Notes

Object Configuration Manager

Using the Object Map table, OCM points to the correct data, batch process, or business function for a given environment and user. OCM is the control center for your runtime architecture. EnterpriseOne always uses the OCM to locate the data and platform needed to execute the distributed logic.

OCM Connection with Processing

OCM is used to connect to data and logic on a variety of machines regardless of the type of hardware as shown in the diagram above.

Oracle Internal & OAI Use Only

Describing CNC Fundamentals (continued)

OCM Mappings

The following illustration shows how EnterpriseOne uses the relationship between OCM mappings and path codes to create an environment:

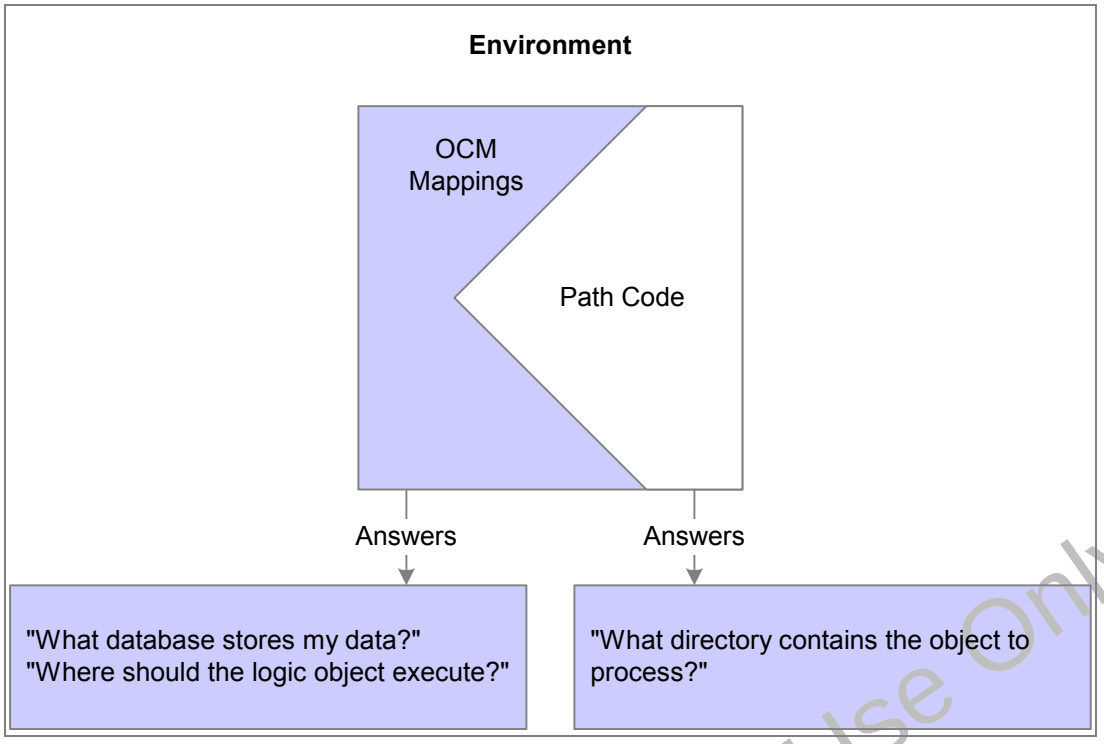

Slide 22

Student Notes

OCM Mappings and Environment

Every environment has an associated set of OCM mappings that indicates the distributed data and distributed processing locations for that environment.

This equation represents the relationship among the OCM, a path code, and an environment:

Environment = Path Code + OCM Mappings

The path code indicates which directory contains the object being processed.

The OCM mappings indicate which database stores the data and where the logic object executes.

Oracle Internal & OAI Use Only

Describing CNC Fundamentals (continued)

Definition of Data Sources

A data source, which is the specific location of data or distributed processing, can be:

- An entire database in a specific location, regardless of the type of database, such as an MSDE database or a library in DB2/400.
- A specific machine, which processes logic, in the enterprise.

Slide 23

Student Notes

Data Sources

The platform and data sources work together. You must define both the server that processes the logic and the databases that store the data. If multiple databases within one database management system (DBMS) reside on a machine, you must define each database for EnterpriseOne.

Do not confuse Microsoft open database connectivity (ODBC) data sources with EnterpriseOne data sources. The ODBC data source defines databases to various third-party communication products, such as Client Access, Rumba, SQL Server, and Access. EnterpriseOne data sources define both databases and logic servers to EnterpriseOne.

The following list describes EnterpriseOne data sources that you might use in your configuration:

Data Source	*Definition*
Oracle DBMS	An EnterpriseOne data source for an Oracle DBMS points to an Oracle connect string and a table owner.
SQL Server DBMS	An EnterpriseOne data source for a SQL Server DBMS points to a SQL server database (ODBC data source) and a table owner.
DB2/400 DBMS	An EnterpriseOne data source for a DB2/400 DBMS points to an RDB directory entry and a Library (ODBC data source).
MSDE DBMS	An EnterpriseOne data source for an MSDE DBMS points to an MSDE database (OLEDB data source).

Oracle Internal & OAI Use Only

Describing How to Find Information About CNC in PeopleBooks

CNC Information

Use the *PeopleSoft EnterpriseOne Tools 8.94 PeopleBook: Configurable Network Computing* to find CNC information including:

- Information on path codes.
- Information on data sources.
- Information on environments.

Slide 24

Student Notes

This table lists the locations of additional information in the *PeopleSoft EnterpriseOne Tools 8.94 PeopleBook: Configurable Network Computing*:

Location	***Type of Information***
Configurable Network Computing Implementation	This chapter discusses the roles involved in a CNC implementation.
Path Code Setup	This chapter provides an explanation of how path codes are used, as well as instruction on adding a new path code.
Object Configuration Manager	This chapter discusses the Object Configuration Manager and various OCM reports.
Environment Setup	This chapter provides instruction on adding, copying, and deleting environments.
Data Sources	This chapter covers both database data sources and logic data sources. It discusses how to add or modify a data source.
Middleware	This chapter provides an explanation of JDENET communication middleware and JDEBASE database middleware.
Typical Customer Configuration	This chapter discusses the typical customer configuration including typical environments and data sources.

Oracle Internal & OAI Use Only

You can access related material by clicking the Help link in the top-right corner of the application page. This automatically takes you to the relevant information in the appropriate PeopleBook.

Note. Context-sensitive help is constrained to non-application-specific pages in the technical database.

Describing How to Find Information About CNC in PeopleBooks (continued)

CNC Information (continued)

The following PeopleBooks contain information that applies to CNC Foundation:

- *PeopleSoft EnterpriseOne Tools 8.94 PeopleBook: Configurable Network Computing Implementation*
- *PeopleSoft EnterpriseOne Tools 8.94 PeopleBook: Foundation*

Slide 25

Student Notes

This table describes the additional PeopleBooks that contain information about CNC.

PeopleBook	***Description***
PeopleSoft EnterpriseOne Tools 8.94 PeopleBook: Configurable Network Computing Implementation	This PeopleBook covers all of the elements necessary for implementing CNC.
PeopleSoft EnterpriseOne Tools 8.94 PeopleBook: Foundation	This PeopleBook describes the advantages of CNC as well as the six fundamentals: object storage, environments, path codes, Object Configuration Manager, data sources, and object deployment.

Oracle Internal & OAI Use Only

Review

In this lesson, you learned that:

- CNC allows distributed data and distributed applications across multiple platforms without affecting end users.
- Advantages of the CNC architecture include network-centric software, flexible leveraged technology, worldwide business support, and custom solutions without consequences.
- The fundamentals of the CNC architecture include objects, object storage, object deployment, environments, path codes, OCM, and data sources.

Slide 26

Student Notes

Oracle Internal & OAI Use Only

Notes

Oracle Internal & OAI Use Only

Lesson 3

Creating Path Codes

Objectives

By the end of this lesson, you will be able to:

- Describe path code setup.
- Create path codes.

Slide 28

Student Notes

Oracle Internal & OAI Use Only

Describing Path Code Setup

Path Codes and Object Storage

This diagram shows the relationship between path codes and object storage:

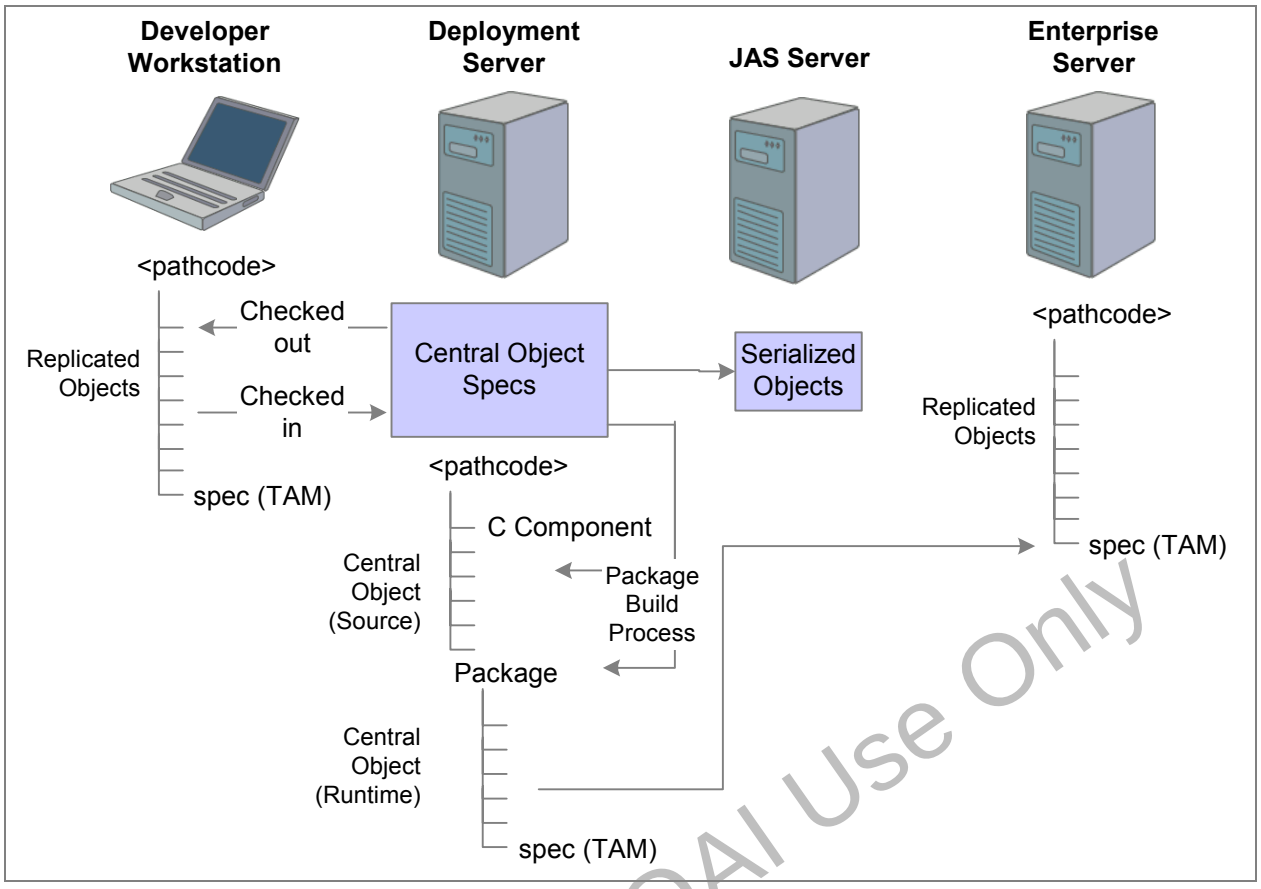

Slide 29

Student Notes

Path Codes and Object Storage

A path code points to a set of objects. A path code definition must associate a set of C components in a directory path with a set of object specifications. In this diagram, you can see how path codes are used to point to both replicated objects on workstations and enterprise servers as well as central objects on the deployment server.

Oracle Internal & OAI Use Only

Describing Path Code Setup (continued)

Central Objects and Path Codes

This diagram shows the relationship between central objects and path codes:

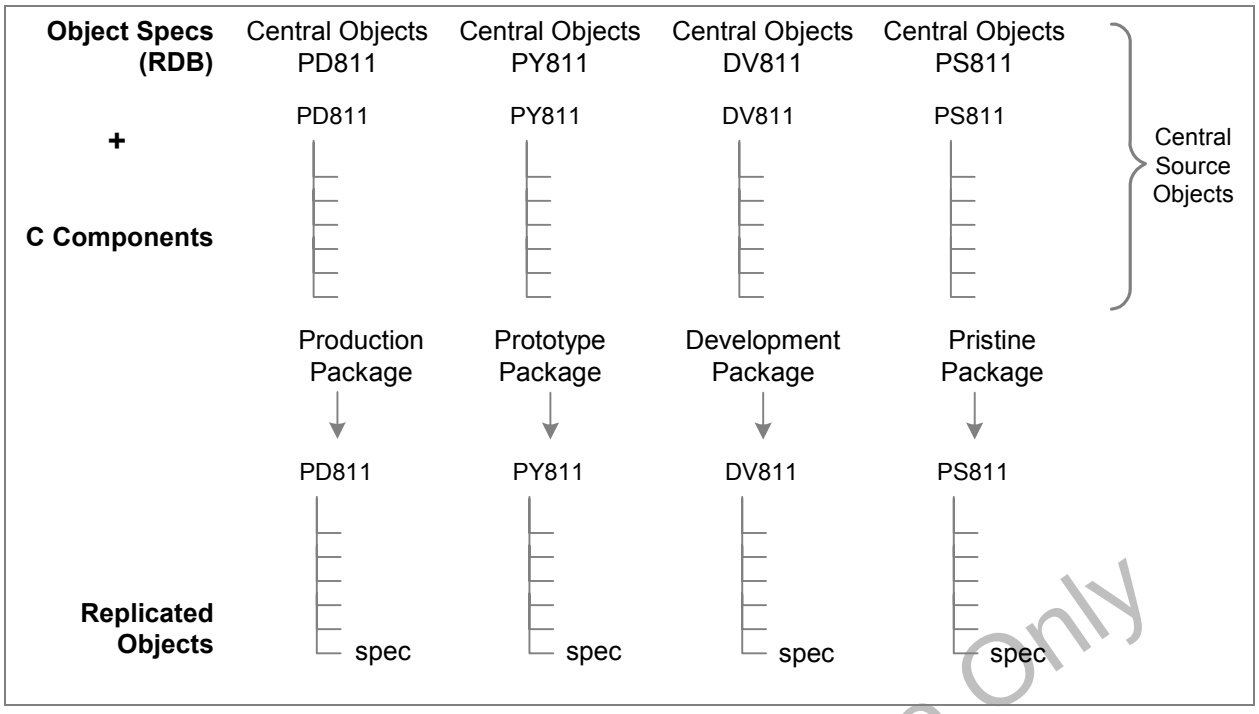

Slide 30

Student Notes

Central Objects and Path Codes

The path code specifies which set of central objects is used when creating a particular package. Once the package has been deployed, the path code also specifies where the new replicated objects reside.

Oracle Internal & OAI Use Only

Describing Path Code Setup (continued)

How to Use Path Codes

For each set of objects in your configuration, you must define a path code in the Object Path Master File table (F00942).

Path codes are used for:

- Installation
- Runtime
- Development

Slide 31

Student Notes

Path Codes

A path code is a pointer to a set of objects.

The Path Code Master program (P980042) uses the Object Path Master File table.

A path code definition must associate a set of C components in a directory path with a set of object specifications.

PeopleSoft EnterpriseOne recommends a separate path code definition for these sets of objects:

- Pristine objects
- Production objects
- Development objects
- Prototype objects

Oracle Internal & OAI Use Only

Describing Path Code Setup (continued)

Path Code Functions

Path codes are used for these functions:

Function	*Description*
User session	A local workstation directory that defines a set of replicated objects.
Package builds and deployment	The set of central objects that you use to build and deploy packages.
Development	A set of central objects that a developer uses to check in and check out objects.

Slide 32

Student Notes

User Session

When a developer logs on to a workstation, the path code locates the local workstation directory that defines a set of replicated objects.

Package Builds and Deployment

When an administrator builds a package, he specifies which set of central objects is used to build that package. The path code defines whether development or production objects are used.

Development

When a developer begins working on a particular object, she checks it out from central objects to make sure that she has the latest specifications. When she is finished, she checks the object back in to central objects so that others can use the modified or new object. The path code points to the set of central objects used for development.

Oracle Internal & OAI Use Only

Creating Path Codes

Creating a Path Code

To create a path code:

1. Create a new directory on the deployment server.
2. Copy subdirectories.
3. Create a database.
4. Create a table owner.
5. Modify system tables.
6. Copy specifications to the database.
7. Modify Object Configuration Manager (OCM).

Slide 33

Student Notes

Creating a Path Code

You might want to create path codes to supplement the ones you created during installation. When you add a path code, you must also create a path code definition and modify Object Librarian tables.

Steps to Create a Path Code

1. Create a new directory on the deployment server for the new path code. Each central object data source should have an associated directory path on the deployment server.
2. Copy the subdirectories of an existing path code into the new directory.
3. Create a new Oracle or SQL database or increase the size of the existing database to hold a set of central object specifications for the new path code.
4. Create a new table owner for the new set of central object specifications.
5. Modify the Object Librarian - Status Detail table (F9861) and Versions List table (F983051) for the new path code.
6. Copy the set of central object specifications for the existing path code to the new database.
7. Verify that the installation process created a new data source for the newly copied central objects database (Central Objects - <new path code>). If not, create it.
8. Using the Path Code Master program, modify the new path code definition.
9. Verify that the package definitions (A and B) provided with the installation exist.

Oracle Internal & OAI Use Only

10. Copy existing packages from the existing path code to the new path code, and modify the new package INF files.
11. Verify that the installation process created the environment for the new path code.
12. Modify the OCM mappings for the new environment.

Oracle Internal & OAI Use Only

Creating Path Codes (continued)

Creating a Path Code Definition

You create a path code definition in the Path Code Master program.

Slide 34

Student Notes

Object Path Code Master

The Object Path Master File table contains all path code definitions for the configuration. This table resides in the system data source.

Complete these fields in the Path Code Master program:

- Path Code
- Description
- Location
- Release
- Deployment Data Source
- UNC Flag

Oracle Internal & OAI Use Only

Creating Path Codes (continued)

Modifying Tables for the New Path Code

To modify the Object Librarian - Status Detail table:

1. Back up the Object Librarian - Status Detail table.
2. Obtain a record count.
3. Create a temporary table from the Object Librarian - Status Detail table.
4. Update the temporary table with the new path code.
5. Add the temporary records to the master Object Librarian - Status Detail table.

Slide 35

Student Notes

Modifying Tables

You must modify the Object Librarian - Status Detail table and the Versions List table to reflect the new path code so that developers can check in and check out valid Central Objects information.

Oracle Internal & OAI Use Only

Activity 1: Troubleshooting Path Code Definitions

In this activity, you will review the activity overview and troubleshoot path code definitions.

See *CNC Foundation: Activity Guide,* lesson 3, "Creating Path Codes," Activity 1: Troubleshooting Path Code Definitions.

Slide 36

Student Notes

Oracle Internal & OAI Use Only

Review

In this lesson, you learned that:

- A path code definition must associate a set of C components in a directory path with a set of object specifications.
- For each set of objects in your configuration, you must define a path code in the Object Path Master File table.

Slide 37

Student Notes

Additional Resources

This table lists additional resources that provide more details about the topics that we have discussed in this lesson:

Topic	***Cross Reference***
Path codes	*PeopleSoft EnterpriseOne Configurable Network Computing Implementation 8.94*, "Path Code Setup."

Oracle Internal & OAI Use Only

Notes

Oracle Internal & OAI Use Only

Lesson 4

Creating Data Sources

Objectives

By the end of this lesson, you will be able to:

- Describe data sources.
- Describe database structures.
- Create data sources.

Slide 39

Student Notes

Oracle Internal & OAI Use Only

Describing Data Sources

Data Sources

In a distributed client/server environment, this information must be defined for EnterpriseOne:

- Where to find specific data and which database and tables store the information.
- Where to execute logic processes and whether the report or application logic is processed on a server or local workstation.
- How to connect and communicate with each data source or logic server.

Slide 40

Student Notes

Data Sources

Data sources are the building blocks that you use to set up an enterprise configuration. Data sources define to EnterpriseOne all the databases and logic machines that the EnterpriseOne configuration requires. Each database and machine in the enterprise must be defined as a data source for EnterpriseOne to recognize it.

Types of Data Sources

There are two types of data sources:

- Database
- Logic

Data source definitions for both database data sources and logic data sources are stored in the Data Source Master table (F98611). There is a column within this table that specifies whether the data source is a logic data source or a database data source.

Oracle Internal & OAI Use Only

Describing Data Sources (continued)

Database Data Sources

Rather than placing all tables in a single database, EnterpriseOne uses a database data source to point to logically grouped tables.

A database data source points to the location of the specific data that applications access.

Slide 41

Student Notes

Database Data Sources

A database is a grouping of tables in a database management system. You must identify databases to the applications that access them. You can distribute databases across a network and involve various servers and database management systems. A database data source identifies the database information that the software needs to connect to a database.

Oracle Internal & OAI Use Only

Describing Data Sources (continued)

Logic Data Sources

A logic data source points to a machine location for executing EnterpriseOne business logic.

EnterpriseOne requires a separate logic data source definition for each machine that executes business logic processes.

Slide 42

Student Notes

Logic Data Sources

A logic machine is the machine on which batch applications and master business functions run. You must identify logic machines using a data source definition. The data source definition must include the network information about the machine, such as a server name – HP9000, for example.

When mapping logic objects for distributed processing, the software uses the machine data source (distributed processing data source) as the target location for processing logic objects.

Oracle Internal & OAI Use Only

Describing Data Sources (continued)

Planning for Data Sources

To plan for data sources:

1. Evaluate the location of your system data.
2. Identify the enterprise servers in your configuration that will host logic, and set up one distributed processing data source and one server map data source for each enterprise logic server.
3. Evaluate how many groups of EnterpriseOne objects you require to support your business environment, and set up one central objects data source for each group of objects.
4. Set up one business data data source for each database and library that contains business data tables that EnterpriseOne applications use.
5. Set up one control table data source for production and one for testing.

Slide 43

Student Notes

Planning for Data Sources

It is important to plan for data sources. The proper identification of all required data sources is critical to having a correct configuration that supports the needs of the business. Be sure to include all machines and all databases in your enterprise.

Oracle Internal & OAI Use Only

Activity 2: Defining Data Source Terms

In this activity, you will review the activity overview and define data source terms.

See *CNC Foundation: Activity Guide,* lesson 4, "Creating Data Sources," Activity 3: Defining Data Source Terms.

Slide 44

Student Notes

Oracle Internal & OAI Use Only

Describing Database Structures

Database Structures

All supported database platforms have a similar configuration of tables and data sources.

Slide 45

Student Notes

Database Owners

This diagram shows owners and databases for four different platforms:

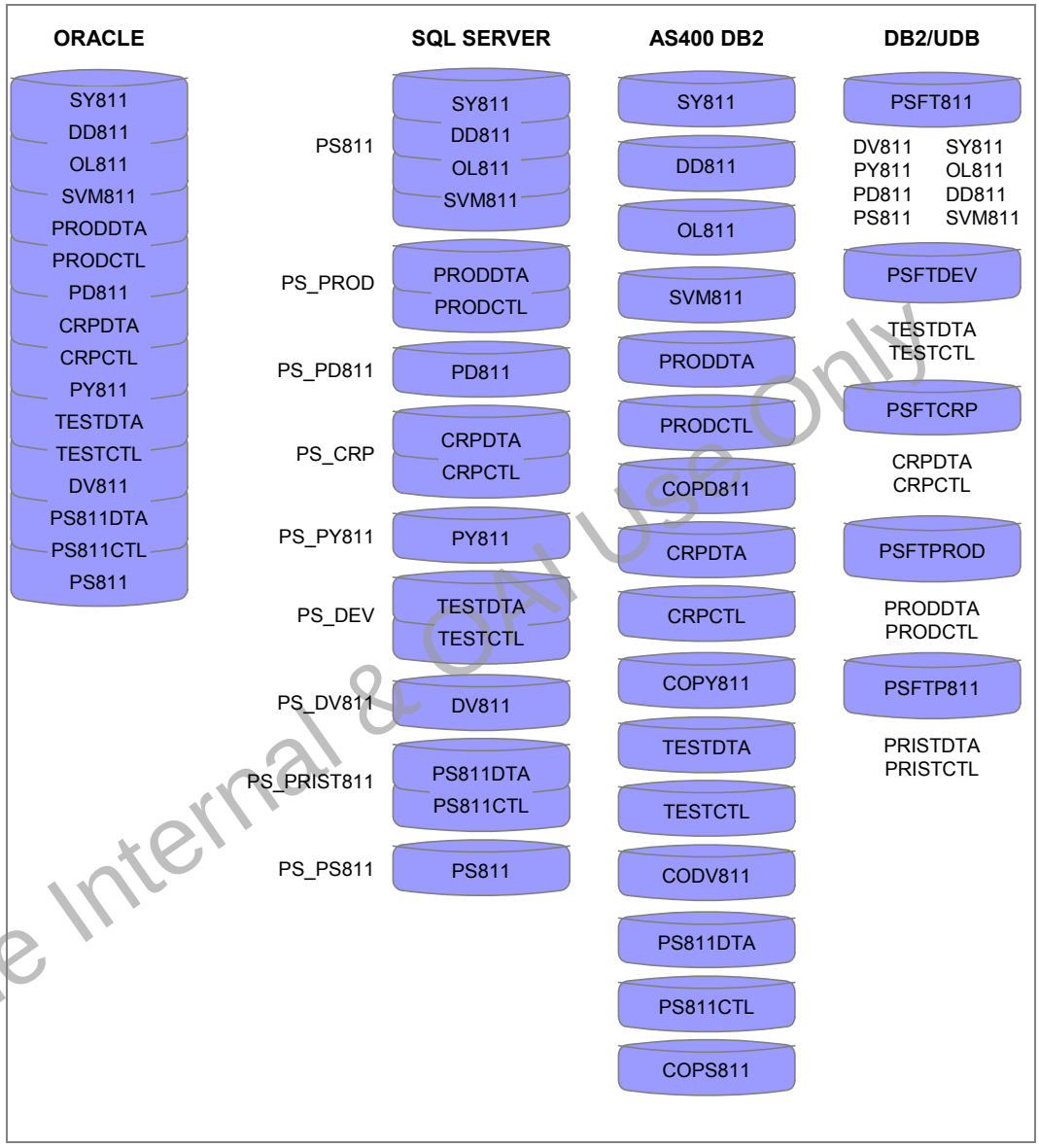

Example of owners and databases structure

Oracle Internal & OAI Use Only

Describing Database Structures (continued)

Oracle Structure and EnterpriseOne

This diagram shows the Oracle structure with EnterpriseOne:

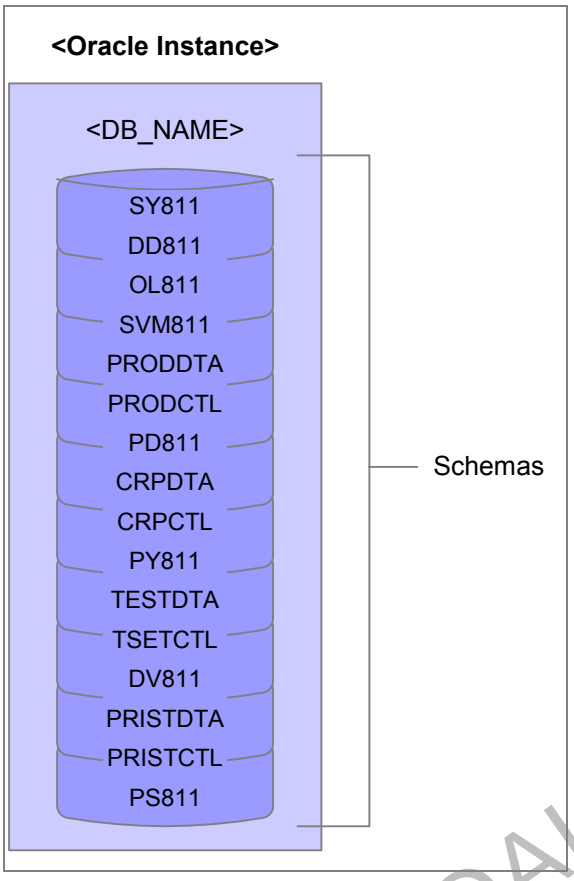

Slide 46

Student Notes

Oracle Structure

Select * from PRODDTA.F0101 where:

Data Source Name	*Object Owner (SCHEMA)*	*Database Name (Oracle Connect String)*	*OCM Data Source*
System – 811	SYS811	connect_string	Yes
Data Dictionary – 811	DD811	connect_string	No
Object Librarian – 811	OL811	connect_string	No
<SERVER> - 811 Server Map	SVM811	connect_string	Yes
Business Data - Prod	PRODDTA	connect_string	No

Oracle Internal & OAI Use Only

Data Source Name	***Object Owner (SCHEMA)***	***Database Name (Oracle Connect String)***	***OCM Data Source***
Control Tables - Prod	PRODCTL	connect_string	No
Versions - PD811	PD*811*	connect_string	No
Central Objects - PD811	PD811	connect_string	No
Business Data - CRP	CRPDTA	connect_string	No
Control Tables - CRP	CRPCTL	connect_string	No
Versions - PY811	PY811	connect_string	No
Central Objects - PY811	PY811	connect_string	No
Business Data - TEST	TESTDTA	connect_string	No
Control Tables - TEST	TESTCTL	connect_string	No
Versions - DV811	DV811	connect_string	No
Central Objects - DV811	DV811	connect_string	No
Business Data - PRIST	PRISTDTA	connect_string	No
Control Tables - PRIST	PRISTCTL	connect_string	No
Versions - PS811	PS811	connect_string	No
Central Objects - PS811	PS811	connect_string	No

Oracle Internal & OAI Use Only

Describing Database Structures (continued)

SQL Server Structure and EnterpriseOne

SQL Server delivers nine separate databases during an installation.

Slide 47

Student Notes

SQL Server Structure

This diagram shows the SQL structure with EnterpriseOne:

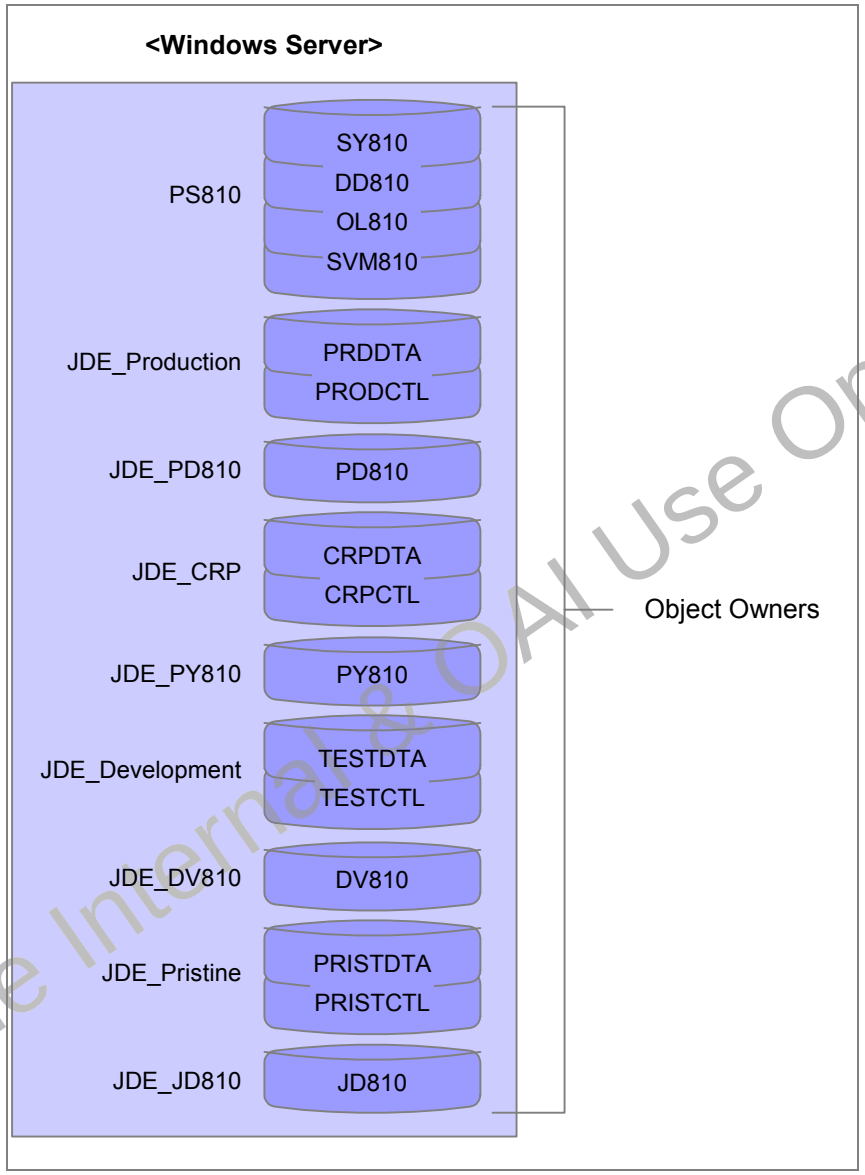

SQL structure with EnterpriseOne

Oracle Internal & OAI Use Only

Select * from PRODDTA.F0101 where:

Data Source Name	***Object Owner (USERS)***	***Database Name (SQL Server ODBC Data Source)***	***OCM Data Source***
System - 811	SY811	PS811	Yes
Data Dictionary - 811	DD811	PS811	No
Object Librarian - *811*	OL811	PS811	No
<SERVER> - 811 Server Map	SVM811	PS811	Yes
Business Data - Prod	PRODDTA	PS_PROD	No
Control Tables - Prod	PRODCTL	PS_PROD	No
Versions - PD811	PD811	PS_PD811	No
Central Objects - PD811	PD811	PS_PD811	No
Business Data - CRP	CRPDTA	PS_CRP	No
Control Tables - CRP	CRPCTL	PS_CRP	No
Versions - PY811	PY811	PS_PY811	No
Central Objects - PY811	PY811	PS_PY811	No
Business Data - TEST	TESTDTA	PS_DEV	No
Control Tables - TEST	TESTCTL	PS_DEV	No
Versions - DV811	DV811	PS_DV811	No
Central Objects - DV811	DV811	PS_DV811	No
Business Data - PRIST	PRISTDTA	PS_PRIST811	No
Control Tables - PRIST	PRISTCTL	PS_PRIST811	No
Versions - PS811	PS811	PS_PS811	No
Central Objects - PS811	PS811	PS_PS811	No

Oracle Internal & OAI Use Only

Describing Database Structures (continued)

AS400 DB/2 Server Structure and EnterpriseOne

AS400 DB/2 installations store all tables in their respective data sources in a single database.

Slide 48

Student Notes

AS400 DB/2 Server Structure

This diagram shows the AS400 DB/2 structure with EnterpriseOne:

Oracle Internal & OAI Use Only

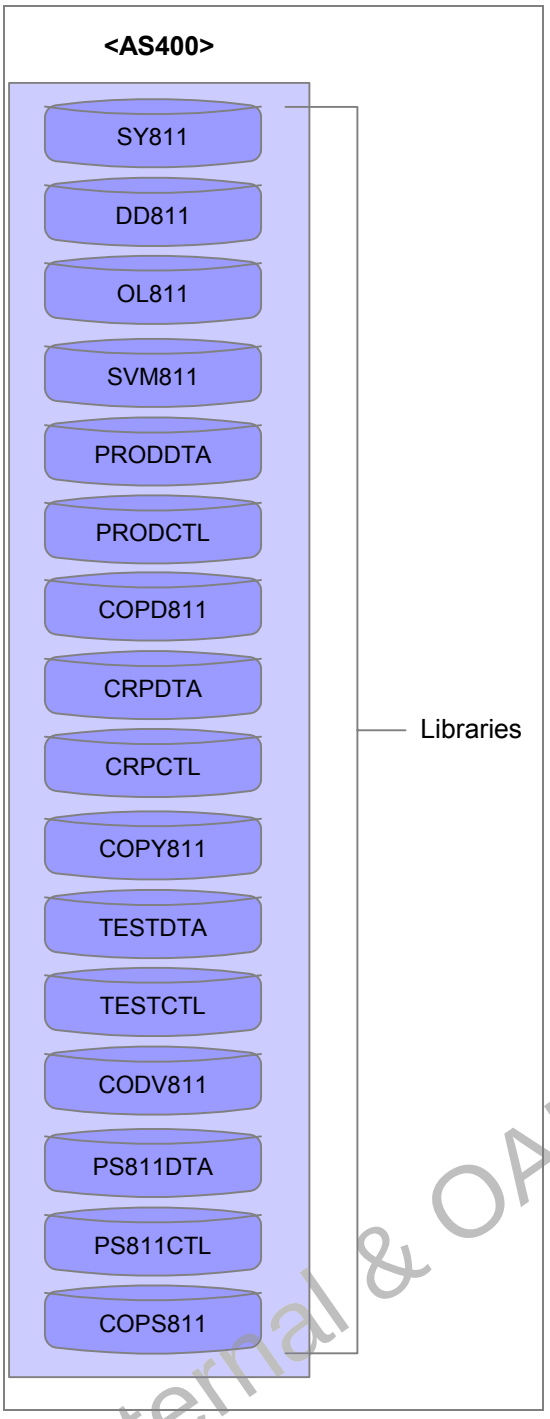

AS400 DB/2 structure with EnterpriseOne

Select * from PRODDTA.F0101 where:

Data Source Name	***Object Owner (LIBRARY)***	***Database Name (Client Access ODBC Data Source)***	***OCM***
System - 811	SY811	System - 811	Yes
Data Dictionary - 811	DD811	Data Dictionary - 811	No

Oracle Internal & OAI Use Only

Data Source Name	***Object Owner (LIBRARY)***	***Database Name (Client Access ODBC Data Source)***	***OCM***
Object Librarian - 811	OL811	Object Librarian - 811	No
<SERVER> - 811 Server Map	SVM811	<SERVER> - 811 Server Map	Yes
Business Data - Prod	PRODDTA	Business Data - Prod	No
Control Tables - Prod	PRODCTL	Control Tables - Prod	No
Central Objects - PD811	COPD811	Central Objects - PD811	No
Versions - PD811	COPD811	Versions - PD811	No
Business Data - CRP	CRPDTA	Business Data - CRP	No
Control Tables - CRP	CRPCTL	Control Tables - CRP	No
Central Objects - PY811	COPY811	Central Objects - PY811	No
Versions - PY811	COPY811	Versions - PY811	No
Business Data - TEST	TESTDTA	Business Data - TEST	No
Control Tables - TEST	TESTCTL	Control Tables - TEST	No
Central Objects - DV811	CODV811	Central Objects - DV811	No
Versions - DV811	CODV811	Versions - DV811	No
Business Data - PS811	PRISTDTA	Business Data - PS811	No
Control Tables - PS811	PRISTCTL	Control Tables - PS811	No
Central Objects - PS811	COPS811	Central Objects - PS811	No
Versions - PS811	COPS811	Versions - PS811	No

Oracle Internal & OAI Use Only

Describing Database Structures (continued)

DB2/UDB 8.1.4 Structure for EnterpriseOne

Each schema (table owner) has a set of four dedicated tablespaces in which the data is physically stored.

IBM recommends that each tablespace be stored on a separate disk drive.

Slide 49

Student Notes

DB2/UDB 8.1.4 Structure

This diagram shows the DB2/UDB 8.1.4 structure with EnterpriseOne:

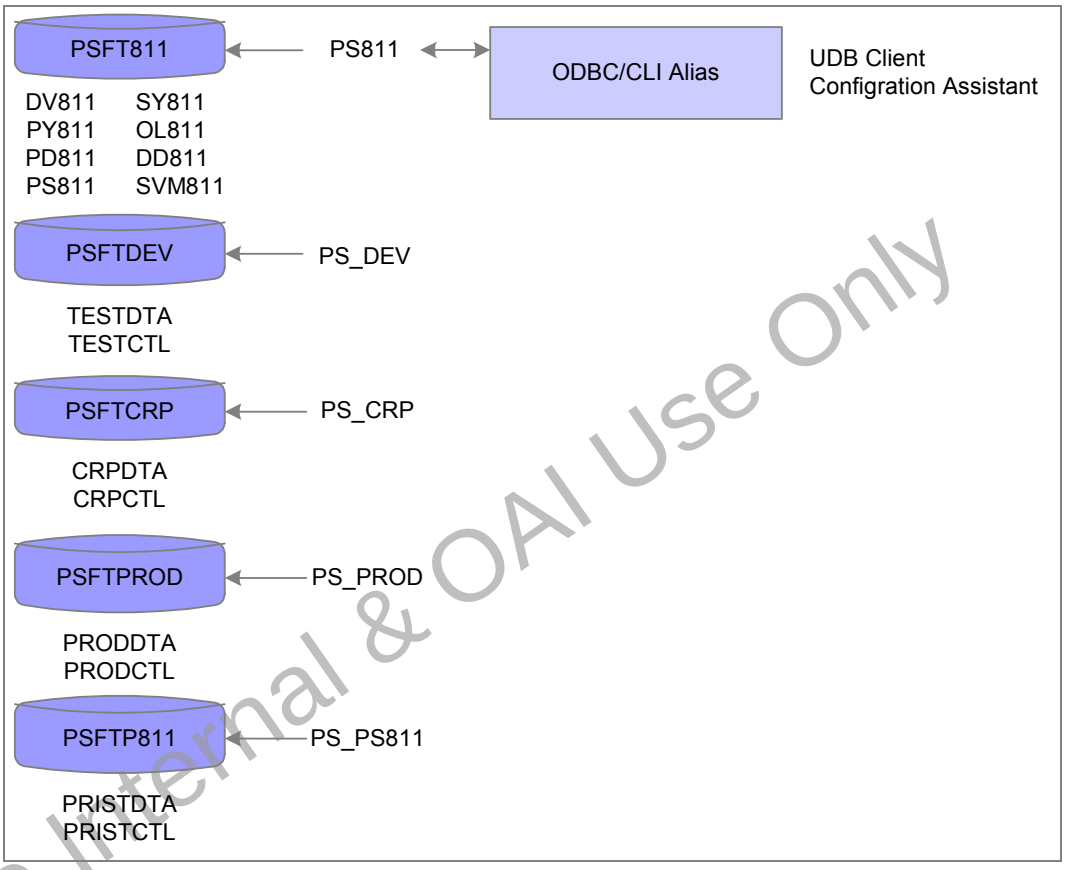

DB2/UDB 8.1.4 Structure

This diagram shows the schemas and associated tablespaces for DB2/UDB 8.1.4:

Oracle Internal & OAI Use Only

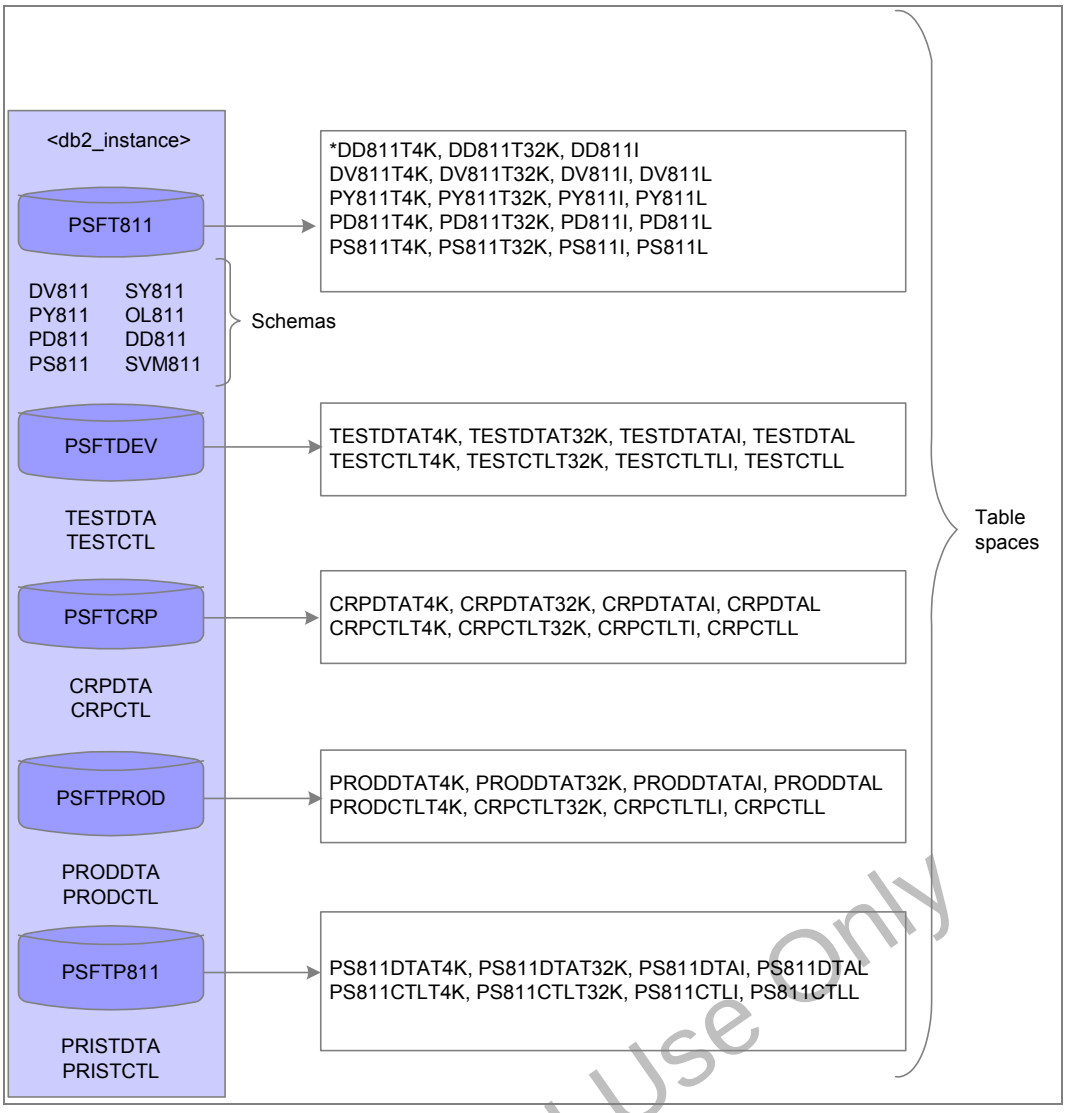

Schemas and Tablespaces for DB2/UDB 8.1.4

Oracle Internal & OAI Use Only

Creating Data Sources

Defining Data Source Naming Conventions

When you add data sources, observe these naming conventions:

- The name can be no longer than 30 characters.
- Text is case-sensitive.
- Text is space-sensitive.

Slide 50

Student Notes

Data Source Naming

Use a meaningful name for data sources. For example, to indicate that you are storing business data for production users, the data source name could be Business Data - Prod. The PeopleSoft system provides demonstration data source names at installation; you can use these for your own data sources.

Oracle Internal & OAI Use Only

Creating Data Sources (continued)

Adding or Modifying Data Sources

You can create new data sources and modify existing data sources.

Slide 51

Student Notes

Steps for Adding or Modifying Data Sources

To add a data source:

1. Access the database data sources or logical data sources.
2. Click Add.

To modify a data source:

1. Access the database data sources or logical data sources, locate the data source that you want to modify, and click Select.
2. On the Data Source Revisions form, complete or modify all required fields, and then click OK.
3. Use the Advanced option on the Form menu to select additional options.
4. Use the Port option on the Form menu to specify port information.

Oracle Internal & OAI Use Only

Creating Data Sources (continued)

Setting Up Processing Options for A Data Source by Running Reports

You can set up processing options for data source reports in the Data Source Master report (R98611) or the Data Source Master Compare report (R986112).

Slide 52

Student Notes

Reports

The Data Source Master batch processes enable you to create a report for a data source or a comparison report for two data sources.

The Data Source Master batch processes are called from a report driver (R98611B), although other EnterpriseOne reports do not require a report driver. You use the R98611B report driver to set processing options for each report. You must enter data selection for a report from the specific report, not from the driver. When you finish entering processing options and data selection, run the report from the driver.

The processing options that you set from the report driver enable you to enter parameters for the Data Source Master report and the Data Source Master Compare report.

Oracle Internal & OAI Use Only

Activity 3: Creating A Data Source

In this activity, you will review the activity overview and create a data source.

See *CNC Foundation: Activity Guide,* lesson 4, "Creating Data Sources," Activity 3: Creating A Data Source.

Slide 53

Student Notes

Oracle Internal & OAI Use Only

Activity 4: Troubleshooting Data Source Definitions

In this activity, you will review the activity overview and troubleshoot data source definitions.

See *CNC Foundation: Activity Guide,* lesson 4, "Creating Data Sources," Activity 4: Troubleshooting Data Source Definitions.

Slide 54

Student Notes

Oracle Internal & OAI Use Only

Review

In this lesson, you learned that:

- Data sources are the building blocks that you use to set up an enterprise configuration.
- The Data Source Master report enables you to create a report for a data source, and the Data Source Master Compare report enables you to create a comparison report for two data sources.

Slide 55

Student Notes

Additional Resources

This table lists additional resources that provide more details about the topics that we have discussed in this lesson:

Topic	*Cross Reference*
Data sources	*PeopleSoft EnterpriseOne Configurable Network Computing Implementation 8.94*, "Data Sources"

Oracle Internal & OAI Use Only

Lesson 5

Setting Up Environments

Objectives

By the end of this lesson, you will be able to:

- Describe environments.
- Create environments.

Slide 57

Student Notes

Oracle Internal & OAI Use Only

Describing Environments

Definition of Environments

EnterpriseOne environments, which you define, are collections of pointers indicating the location of data and objects.

An environment consists of Object Configuration Manager (OCM) mappings and a path code.

Slide 58

Student Notes

OCM Mappings

The OCM mappings for an environment define:

- Where logic objects are processed.
- Where data objects reside.

Path Code

The path code associated with an environment defines in which directory the objects are located.

Oracle Internal & OAI Use Only

Describing Environments (continued)

Location of Environment Definitions

Environment definitions are stored in these tables:

- Library List Control table (F0093).
- Library List Master File table (F0094).
- Environment Detail table (F00941).
- Object Configuration Master table (F986101).
- Object Path Master File table (F00942).

Slide 59

Student Notes

Environment Tables

The Library List Control table contains valid environments for each user.

The Library List Master File table contains the name of the environment and description.

The Environment Detail table contains the environment name and the associated path code from the Object Path Master File table.

The Object Configuration Master table contains data and logic object mappings for every environment.

The Object Path Master File table stores the location of the path code's central objects, the release associated with this path code, and other details.

Oracle Internal & OAI Use Only

Describing Environments (continued)

Table Relationships

This diagram shows environment table relationships:

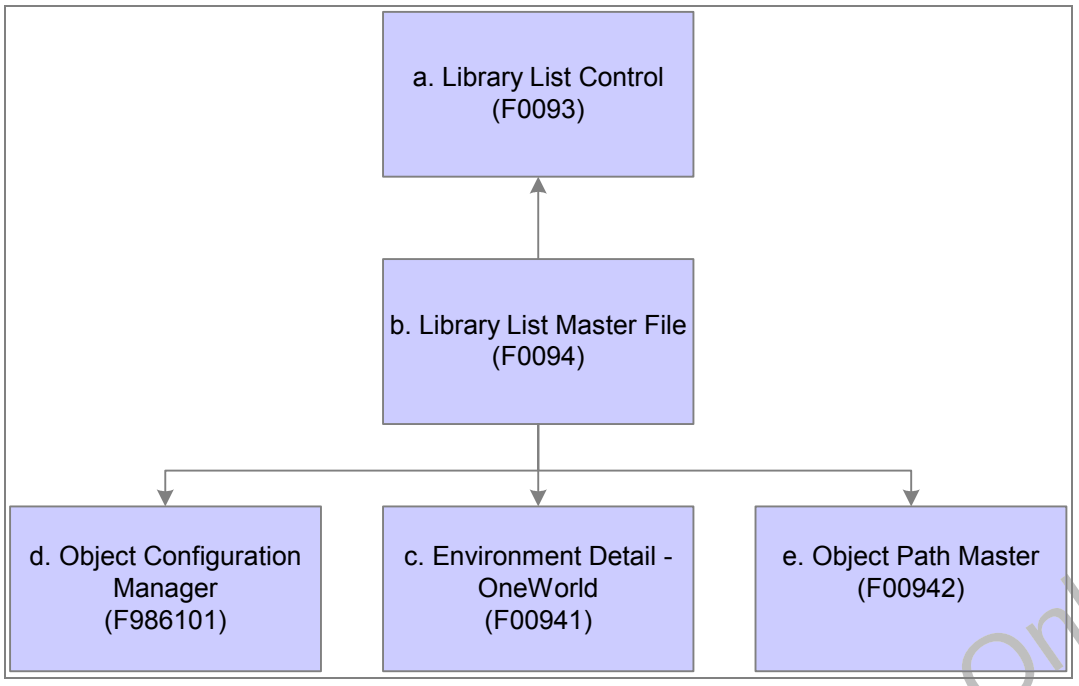

Slide 60

Student Notes

Environment Table Relationships

The Library List Control table and the Environment Master table have a direct correlation. For each environment listed as a valid user environment in the F0093, there is one F0094 record that provides the name and description of that environment. The F986101 and F00941 and F00942 provide additional information for each of the environments defined in the Environment Master table (F0094).

Oracle Internal & OAI Use Only

Creating Environments

Adding An Environment

To add an environment:

1. Access the Library List Master File.
2. Add an environment.
3. Select the WAN Configured Environment and Detached Mode options.
4. Enter the OL Data Source.

Slide 61

Student Notes

Creating An Environment

When you do not want to use the object mappings for an existing environment, you should add a new environment rather than copy an existing environment. For example, if you are setting up store-and-forward processing, consider adding a new environment because the OCM mappings for the store-and-forward users differ from the OCM mappings for the direct connect users.

Note. When you add an environment without copying an existing one, you must create the OCM mappings manually. For this reason, it is typically easier to create a new environment by copying an existing one and adjusting the OCM mappings than to create them manually.

Oracle Internal & OAI Use Only

Creating Environments (continued)

Copying An Environment

To copy an existing environment:

1. Access the Library List Master File.
2. Locate an environment, and then copy the record.
3. Name the environment.
4. Change the path code for the newly created environment.

Slide 62

Student Notes

Copying An Environment

When you create a new environment by copying an existing environment, the software also copies the OCM mappings that are associated with the existing environment. You can use a processing option to specify whether you want to copy additional OCM mappings at the time that you copy the environment.

You can copy environments from existing environments, or you can use the Installation Planner, which provides sample production environments for use as templates. These templates contain suggested mappings for all EnterpriseOne tables.

Note. The system adds a new environment to the Library List Master File table . For the new environment, the system creates a record in the Environment Detail table , as well as a set of mappings in the Object Configuration Master table in the system data source. Depending on the processing options, the system might also create a set of mappings in server map data sources.

Oracle Internal & OAI Use Only

Creating Environments (continued)

Deleting An Environment

You delete an environment in the Library List Master File.

Slide 63

Student Notes

Deleting an Environment

When you delete an environment, the system removes the environment definition and deletes the OCM records that are associated with the environment. You can set a processing option if you want to specify additional OCM mappings to delete when you delete the environment. The processing option values you enter determine whether you can delete or copy mappings in other server map data sources.

Oracle Internal & OAI Use Only

Activity 5: Setting Up Environments

In this activity, you will review the activity overview and:

- Define an environment.
- Troubleshoot environment definitions.

See *CNC Foundation: Activity Guide,* lesson 5, "Setting Up Environments," Activity 5: Setting Up Environments.

Slide 64

Student Notes

Oracle Internal & OAI Use Only

Review

In this lesson, you learned that:

- An environment consists of OCM mappings and a path code.
- When you create a new environment, the system adds it to the Library List Master File table.

Slide 65

Student Notes

Additional Resources

This table lists additional resources that provide more details about the topics that we have discussed in this lesson:

Topic	*Cross- Reference*
Environment setup	*PeopleSoft EnterpriseOne Configurable Network Computing Implementation 8.94*, "Environment Setup."

Oracle Internal & OAI Use Only

Notes

Oracle Internal & OAI Use Only

Lesson 6

Using Object Configuration Manager

Objectives

By the end of this lesson, you will be able to:

- Define Object Configuration Manager (OCM).
- Illustrate OCM.
- Run OCM reports.

Slide 67

Student Notes

Oracle Internal & OAI Use Only

Defining OCM

OCM Definition

The OCM stores information in tables that tell the software where data resides and where processing occurs.

At runtime, the software uses the OCM to determine these data and processing locations.

Slide 68

Student Notes

Advantages of OCM

The ability to distribute logic and data provides for flexibility in determining your own partitioning schemes. It also provides independence in using only the data and logic objects that you need and allows for growth within your enterprise systems. You can later add more databases to store data or machines to process logic. You would need to define the data sources for each and create appropriate OCM mappings.

Oracle Internal & OAI Use Only

Defining OCM (continued)

Description of OCM

The OCM program configures distributed processing and data dynamically without any programming.

Depending on the environment and the user, the OCM points to the correct location for:

- Data
- Batch processes
- Business functions

Slide 69

Student Notes

Two Required OCM Tables

You always need at least two OCM tables:

- One table for all workstations.
  - Store this table in a centralized system data source. Normally, a central data server stores your system data source. If the central server is unavailable, PeopleSoft EnterpriseOne uses the JDE.INI file on the workstation to determine the secondary location.
- One table for each logic server.
  - Servers process information differently than workstations; for example, the server map data source for each logic server stores separate OCM tables for server processing.

Oracle Internal & OAI Use Only

Defining OCM (continued)

OCM Characteristics

OCM has the following characteristics:

- Data and logic resources can be located on any machine, and EnterpriseOne must know where each resource is located.
- OCM is the method of managing distributed data and distributed logic processing in a CNC configuration.
- OCM is a collection of data sources, or *pointers,* to databases and logic processing machines.

Slide 70

Student Notes

OCM Characteristics

OCM can be likened to a police officer directing traffic. When a request for data or logic processing occurs, OCM directs it to the appropriate database or machine. OCM contains a large number of mappings that define where individual tables exist when looking for data. OCM also contains mappings that define where particular types of logic, specifically business functions or UBEs, will be processed.

Oracle Internal & OAI Use Only

Defining OCM (continued)

Information Requests

This diagram shows an information request from OCM:

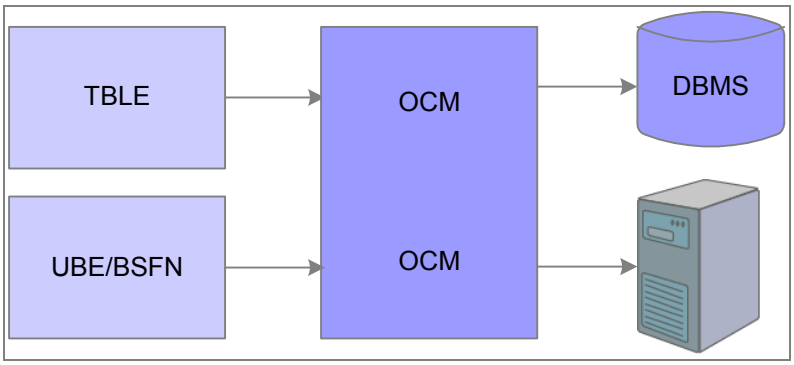

Slide 71

Student Notes

Information Requests

- When an application requests data from a table, OCM points to the appropriate database data source.
- When an application requests a logic object for processing, OCM points to the appropriate logic data source.

Oracle Internal & OAI Use Only

Illustrating OCM

Explanation of Mapping Objects

Characteristics of OCM mapping are:

- You map objects by environment.
- You choose an environment that you have already created and map the objects for that environment to the data sources that you want those objects to use.
- For all instances of object types that allow for mappings, you can set default mappings to one data source, and you can map individual objects to data sources.

Slide 72

Student Notes

Default Map

Important! Each environment must have a default map for TBLE (table) objects for the *PUBLIC user profile because table objects have no inherent default location. If table objects do not have a default map and are not explicitly mapped by name, the software displays a Select/Failed error message.

Oracle Internal & OAI Use Only

Illustrating OCM (continued)

Processing Options for OCM

OCM has processing options that enable you to:

- Control error handling.
- Specify the data source to use to compare, update, delete, or copy data in OCM batch applications.

Slide 73

Student Notes

OCM (P986110) Processing Options

Use the error handling processing option to specify whether an error or a warning should be issued when a table does not exist in the data source to which it is mapped.

OCM Reports Processing Options

If the report is being called from the OCM Report Driver (R988611A), use the processing options to specify which report to run. You can choose from the following reports:

- R986101 (OCM Mapping Comparison)
- R986110 (OCM Global Update)
- R986120 (Object Configuration Delete)
- R986121 (Object Configuration Copy).

The individual reports have their own processing options. You can specify whether to run the report in proof or final mode. You may need to specify the appropriate data source in the processing options. For example, when running R986101, specify two data sources to compare. Or specify the data source to copy or delete when running the corresponding reports.

Oracle Internal & OAI Use Only

Illustrating OCM (continued)

Generic Text Mappings

The Generic Text Language Status table (F001651) has more mapping flexibility than other objects because the data stored in this table has different uses.

The generic text categories include:

- Common data that all environments use.
- Production data that is specific to an environment.

Slide 74

Student Notes

Common Data

For example, data dictionary glossaries and business function notes are the same across all environments.

Environment-Specific Data

For example, inventory item notes and address book supplemental data may be different in production, test, and pristine environments.

Oracle Internal & OAI Use Only

Running OCM Reports

Steps to Set Up Processing Options for OCM Reports

To set up processing options for OCM reports:

1. Access the Object Configuration Manager reports.
2. On the Work With Batch Versions - Available Versions form, select a version, and then select Processing Options from the Row menu.
3. If you selected the Job Master Deletion by Days Old report, on the Processing Options form, select the tab for the applicable report.
4. Click OK to save and exit to the Work with Batch Versions - Available Versions form.

Slide 75

Student Notes

OCM Reports

The Object Configuration Manager provides reports that help you track your mappings.

Some Object Configuration Manager reports are called when you choose that report from the PeopleSoft EnterpriseOne menu. Other Object Configuration Manager reports are called from a report driver job. Although the result is the same, you set processing options and data selection differently for a report that a report driver calls.

When a report driver calls a report, you set processing options from the report for all reports that are launched from the driver. For example, the R988611A driver calls the Mapping Comparisons, Global Update, OCM Delete, and OCM Copy reports.

When you enter data selection, you enter it for the specific report, not from the report driver. When you finish entering processing options and data selection, you can run the report from the report driver.

Oracle Internal & OAI Use Only

Running OCM Reports (continued)

Steps to Run OCM Reports

To run OCM reports:

1. Access the batch versions.
2. On the Work With Batch Versions - Available Versions form, select the version that corresponds to the report that you want to run.
3. Click Select.
4. On the Version Prompting form, click Submit to run the report.

Slide 76

Student Notes

Oracle Internal & OAI Use Only

Activity 6: Using OCM

In this activity, you will review the activity overview and:

- Define a system role.
- Define OCM mappings.
- Review OCM mappings.
- Troubleshoot OCM mappings.

See *CNC Foundation: Activity Guide,* lesson 6, Using Object Management Configuration," Activity 6: Using OCM.

Slide 77

Student Notes

Oracle Internal & OAI Use Only

Review

In this lesson, you learned that:

- The OCM program dynamically configures distributed processing and data without any programming.
- For all instances of an object type, you can set default mappings to one data source, and you can map individual objects to data sources.
- You must enter data selection for a specific report, not from the report driver.

Slide 78

Student Notes

Additional Resources

This table lists additional resources that provide more details about the topics that we discussed in this lesson:

Topic	*Cross Reference*
Object Configuration Manager	*PeopleSoft EnterpriseOne Configurable Network Computing Implementation 8.94*, "Object Configuration Manager"

Oracle Internal & OAI Use Only

Lesson 7

Defining Middleware

Objectives

By the end of this lesson, you will be able to:

- Define middleware.
- Describe user security.
- Describe data and logic requests.

Slide 80

Student Notes

Oracle Internal & OAI Use Only

Defining Middleware

Middleware Definition

Middleware is a mechanism that bridges multiple protocol and multiple vendor issues.

EnterpriseOne provides the following types of middleware:

- JDENET communication middleware.
- JDEBASE database middleware.

Slide 81

Student Notes

Middleware

Middleware is a layer of software, which resides between the operating system and the business applications. It is important to have an application architecture that is based on a single consistent middleware strategy.

JDENET

JDENET performs the connections from client to server and server to server and sends messages for distributed requests. It is a peer-to-peer, message-based, socket-based, multiprocessing communication middleware solution.

JDEBASE

JDEBASE provides platform-independent application program interfaces (APIs) for multiple database access. JDEBASE also provides client-to-server and server-to-server database access.

Oracle Internal & OAI Use Only

Defining Middleware (continued)

Describing JDENET

JDENET has the following properties:

- Is a TCP/IP socket-based messaging middleware.
- Gives PeopleSoft EnterpriseOne distributed processing capabilities.
- Provides peer-to-peer architecture.
- Supports both synchronous and asynchronous messages.
- Defines the PeopleSoft EnterpriseOne server architecture.

Slide 82

Student Notes

Protocol Layers for Communication

To communicate with each other across a network, the two computers must share a communications protocol or set of protocols. JDENET is concerned with three protocol layers. The network layer handles addressing and routing information, error checking, and retransmission requests. The transport layer provides connection-oriented data-delivery services across networks. The application layer provides application-to-application interaction and data exchange. JDENET is the application layer communication middleware.

TCP/IP Ports by Release

The TCP/IP ports corresponding to specific releases are:

- ERP8 (B733.4) = 6010.
- EnterpriseOne (B9) = 6011.
- EnterpriseOne (810) = 6013.
- EnterpriseOne (811) = 6014.

Oracle Internal & OAI Use Only

Defining Middleware (continued)

Where Is JDENET Used?

JDENET is used in the following locations:

- On the client workstation.
- On the enterprise server.

Slide 83

Student Notes

Client Workstation

Although client workstations can have more than one copy of EnterpriseOne loaded, only one EnterpriseOne Windows-executable application can be running at one time. The software uses an internal network process (also called net process) called JDENET to communicate a request to the EnterpriseOne server.

Servers

Servers also have a net process called JDENET. This process communicates with the client workstations and routes request messages to appropriate dedicated EnterpriseOne processes.

Oracle Internal & OAI Use Only

Defining Middleware (continued)

JDENET Internal Design

JDENET consists of:

- A set of public APIs to create, send, and receive messages.
- The logic to deliver those messages to *dispatch* functions that were written using JDENET to receive these messages.

Slide 84

Student Notes

Messages

JDENET messages contain processing requests, such as requests for business functions, batch jobs, or EnterpriseOne login security. JDENET messages can originate from the client or the server. Messages or application requests can be synchronous or asynchronous.

Oracle Internal & OAI Use Only

Defining Middleware (continued)

Types of Logic in JDENET

At a conceptual level, JDENET consists of the following two types of logic:

- Network logic: JDENET_N.
- Dispatch logic: JDENET_K.

Slide 85

Student Notes

Network Processes

Every enterprise server must have at least one EnterpriseOne network process, which is referred to as a JDENET_N job. This job handles network connections and traffic for EnterpriseOne.

Kernel Processes

If the JDENET_N job determines that the incoming message is a request for logic processing, it routes the request to an appropriate JDENET_K job. The JDENET_K job is the process that provides the link between the JDENET_N job and the appropriate platform-specific processing job. The JDENET_K process is applicable only to servers. The JDENET_K job handles the two-way routing to and from the various logic processes, and the JDENET_N job handles the return delivery to the appropriate machine.

Oracle Internal & OAI Use Only

Defining Middleware (continued)

JDENET Internal Design

This diagram shows the JDENET internal design:

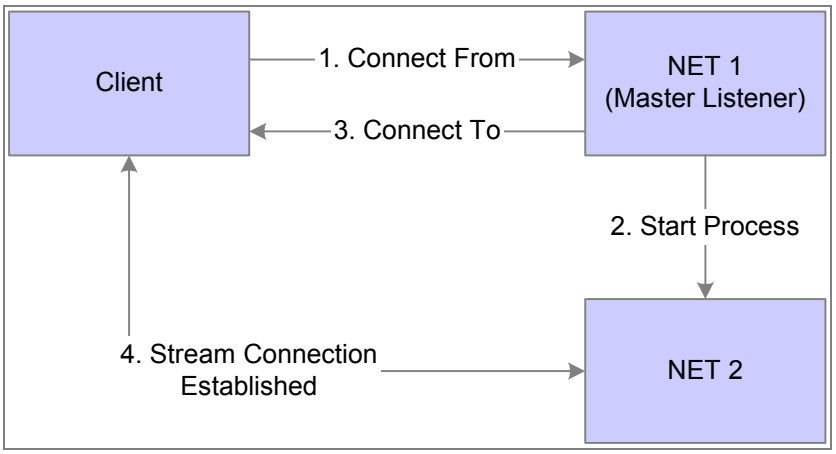

Slide 86

Student Notes

Multiple JDENET_N Processes

As defined in the jde.ini file for each server, multiple JDENET_N processes can exist. Regardless of the number of JDENET_N processes that exist, the initial JDENET_N process serves as the "master listener."

If multiple JDENET_N jobs are specified, the software starts the jobs as required, allocating a job to each request. When the maximum number of JDENET_N processes is started, the software automatically alternates between the currently running JDENET_N jobs until the maximum number of connections is reached, providing load balancing among network processes.

Oracle Internal & OAI Use Only

Defining Middleware (continued)

Internal Messages

This diagram shows internal communication:

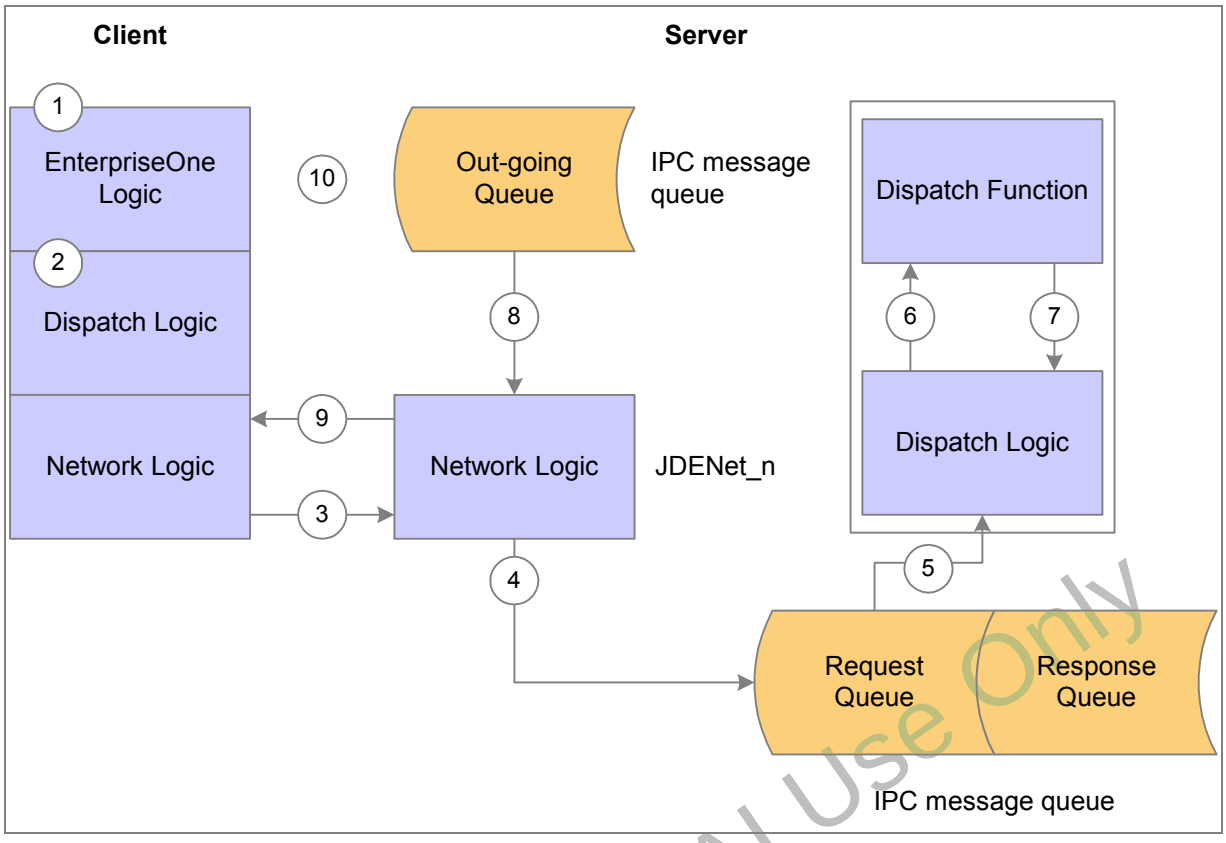

Slide 87

Student Notes

Internal Messages

Messages are stored in internal message queues on the server until they can be processed:

- NET processes have an outgoing queue for messages to be sent (messages can be either requests or responses).
- KERNEL processes have a request queue and a response queue.
- Other processes that use JDENET (such as PORTTEST) have a response queue.

Oracle Internal & OAI Use Only

Defining Middleware (continued)

JDE.INI Settings for JDENET

The following sections in the JDE.INI apply to JDENET:

- [JDENET].
- [JDENET_KERNEL_DEF6].

Slide 88

Student Notes

JDENET_KERNEL

A separate section exists in the jde.ini for each of the dedicated kernel types, and each is responsible for a specific type of EnterpriseOne process. The slide gives just one example as JDENET_KERNEL_DEF6. As of 8.9, there were 24 kernel definitions in the jde.ini

The following is an example of how a kernel is defined in the jde.ini:

```
[JDENET_KERNEL_DEF4]
krnlName = SECURITY KERNEL
dispatchDLLName = jdekrnl.dll
dispatchDLLFunction = JDEK_DispatchSecurity@28
maxNumberOfProcesses = 2
numberOfAutoStartProcesses = 0
```

Oracle Internal & OAI Use Only

Defining Middleware (continued)

Queues

Queues have the following characteristics:

- The number of queues defined is equal to the number of batch processes that can be processed simultaneously.
- Queues are only valid for servers.
- An AS400 server uses native queues that do not need to be defined in EnterpriseOne.

Slide 89

Student Notes

Queue Configuration

When you configure queues, note that:

- Queue definitions are stored in table F986130 (SY810), so you no longer need to modify them in the JDE.INI file.
- A dedicated JDENET Kernel [DEF14], which reads the queue table, has been added to EnterpriseOne.

Oracle Internal & OAI Use Only

Defining Middleware (continued)

JDENET on Windows Servers

Windows servers have these characteristics:

- All communications between the client and the host server occur using sockets.
- The communications between JDENET_N and JDENET_K occur with shared memory.
- JDENET_N and queue kernel communicate using the Job Control Status Master table (F986110).

Slide 90

Student Notes

This diagram shows JDENET on a Windows server:

JDENET on Windows Servers

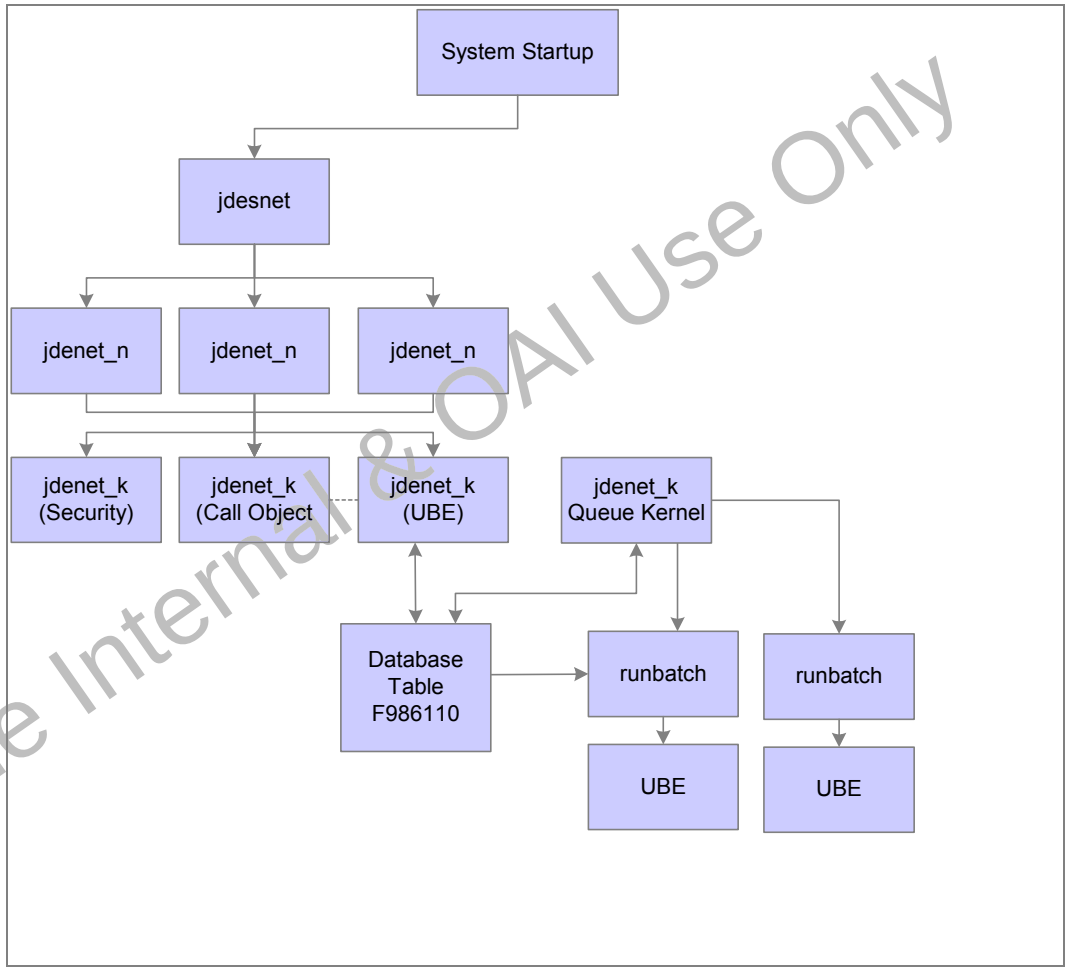

Process flow for Windows

Oracle Internal & OAI Use Only

Process Flow for Windows

The process flow for a Windows server includes these steps:

1. During Windows system startup, jdesnet runs automatically (provided that it is installed to start automatically.)
2. Each time that a new server or workstation connects to this server, jdesnet might start another JDENET_N.
3. Each time that a new request, such as a batch application or business function is submitted, jdesnet (and any JDENET_N processes) might start another JDENET_K process.
4. The PeopleSoft queue service runs the number of instances of queue kernels specified in the jde.ini.
5. When a user submits a batch application, jdesnet or JDENET_N (as part of the host server) communicates with the client.
6. The UBE JDENET_K (the kernel) adds a record in the F986110 table with a status of W (waiting).
7. The queue kernel periodically checks the contents of table F986110 and launches a runbatch process.
8. When runbatch processes the batch application, the following occurs:
   a. The system changes the status stored in table F986110 to *P* (processing).
   b. The system starts the batch application.
   c. If the batch application completes successfully, it changes the status in table F986110 to *D* (done).

      If not, it changes to *E* (error).

Oracle Internal & OAI Use Only

Defining Middleware (continued)

JDENET on AS400 iSeries Servers

AS400 iSeries Servers have these characteristics:

- All communications between the client and the host server occur using sockets.
- The communications between JDENET_N (network processes) and JDENET_K (kernel processes) occur with shared memory.

Slide 91

Student Notes

JDENET on AS400 Servers

This diagram shows JDENET on an AS400 server:

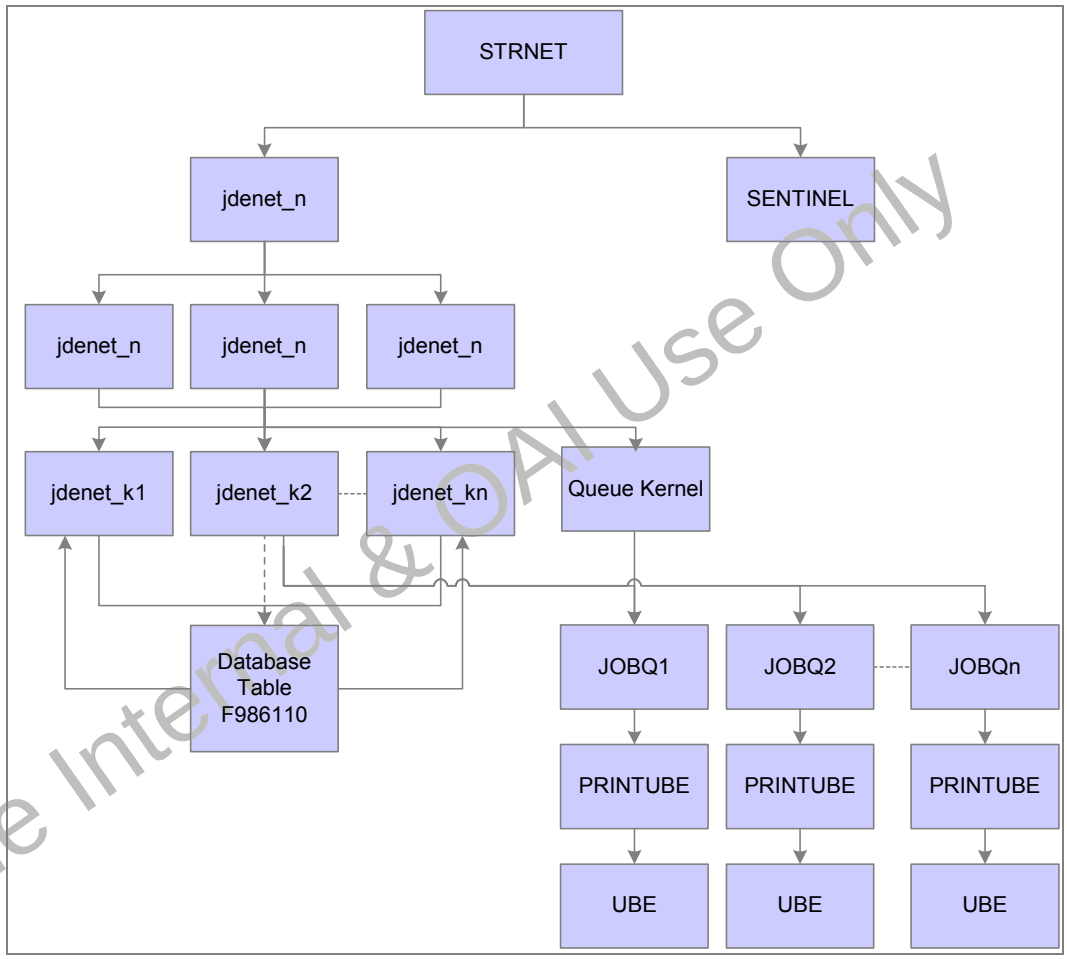

JDENET on AS400 Servers

Oracle Internal & OAI Use Only

Process Flow for iSeries

The process flow for iSeries includes these steps:

1. An iSeries JDENET job starts.

   Executing the iSeries STRNET command results in a single JDENET_N job starting and a SENTINEL job starting in a newly started subsystem.

2. Each time a processing request (such as a UBE or business function) is submitted to the server and all previously started NET processes are busy, EnterpriseOne starts another JDENET_N job in the same subsystem until the number of JDENET_N jobs equals the maxNetProcesses field value in the [JDENET] section of the jde.ini file.

3. Each time a request to the server is submitted, a JDENET_N job starts another JDENET_K job until the number of JDENET_K jobs equals the value in the maxKernelProcesses field in the [JDENET] section of the jde.ini file.

4. When a user submits a batch application or a server package installation, JDENET_N starts a new JDENET_K job and JDENET_K performs the requested action.

5. Messages from JDENET_K are passed back to the request client workstation or server via JDENET_N.

6. If a request to run a batch process is submitted, the following events occur:

   d. JDENET_K adds a record to the F986110 table with a status of *W* for waiting.

   e. JDENET_K submits a job to the queue.

   f. The PRINTUBE process runs the batch application.

   g. PRINTUBE changes the status of the record in the F986110 table to *P* for processing.

   h. If the batch application runs successfully, the software changes the status of the record in the F986110 to *D* for done.

      If not, it changes to *E* for error.

Oracle Internal & OAI Use Only

Defining Middleware (continued)

JDENET on UNIX Servers

This diagram shows JDENET on a UNIX server:

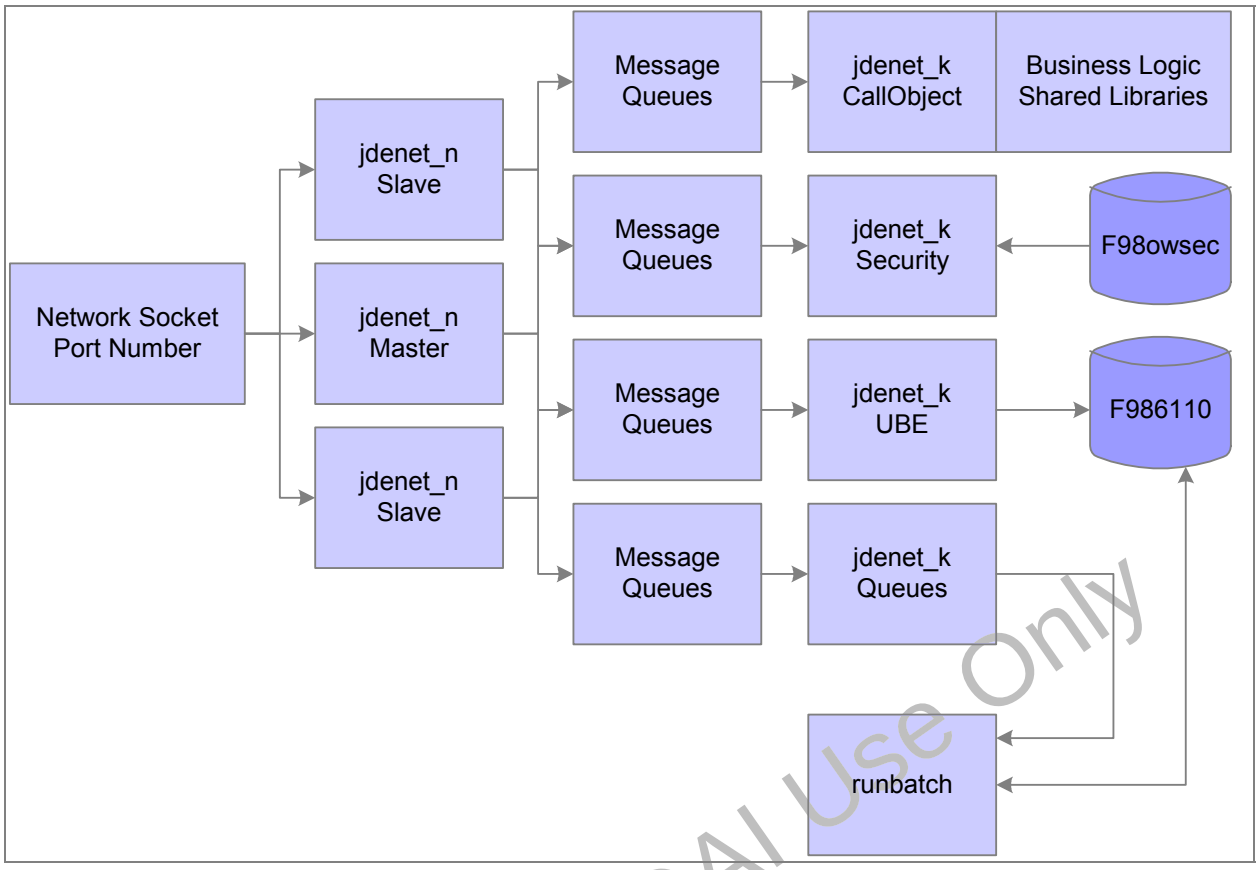

Slide 92

Student Notes

Process Flow for UNIX

The process flow for UNIX includes these steps:

1. The JDENET_N Master process spawns JDENET_N Slave and JDENET_K processes (also called kernels) at startup, as they are needed.

2. The queue kernel process spawns the runbatch process whenever a relevant batch process request is placed in the Job Control Status Master table (F986110).

   The runbatch process completes the job, updates the F986110 table, and then quits.

3. Message queues are a type of interprocess communication (IPC) resource.

The JDENET_N processes allocate them by calls to the operating system. When message packets are routed to the JDENET_N process from a client or another server, the

Oracle Internal & OAI Use Only

JDENET_N process places them in the appropriate message queue according to the type of message. For example, when a client submits a batch process, a message is routed to the batch process kernel.

Oracle Internal & OAI Use Only

Defining Middleware (continued)

JDEBASE

JDEBASE provides:

- The ability to insulate developers from platform-specific SQL coding.
- Rapid development of native drivers.
- Server-to-server communication.
- Transaction processing.

Slide 93

Student Notes

JDEBASE

JDEBASE provides a common interface to interpret the various versions of SQL. It provides a common set of APIs that programmers can call to request data and perform data manipulation logic.

SQL Comparison

The following table shows how different database management systems handle the same SQL statement:

DBMS	*Statement*
Microsoft SQL Server	SELECT * FROM PRODDTA.F0101
Oracle	SELECT * FROM PRODDTA F0101;
DB2/400	SELECT * FROM PRODDTA/F0101

Oracle Internal & OAI Use Only

Describing User Security

User Security During Sign-In

This diagram shows user security through the sign-in process:

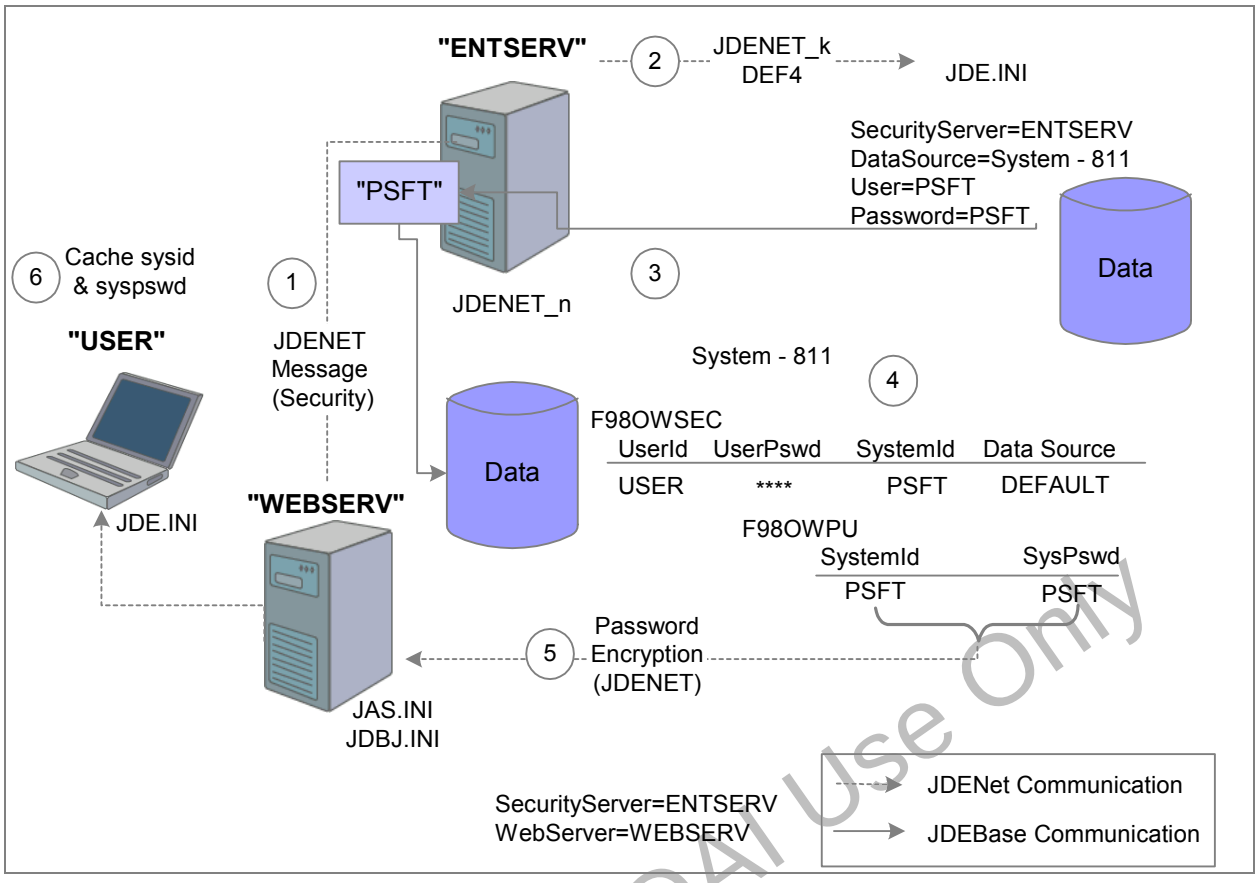

Slide 94

Student Notes

Sign-In Process

The Sign-In Process includes these steps:

1. A JDENET message is send from the virtual client on the E1 Web Server (WEBSERV) to the E1 Enterprise Server (ENTSERV) requesting a user signon.
2. The JDENET message is received by the JDENET listener (JDENET_N) process and handed to the security kernel (JDENET_K) for processing.
3. The JDENET_K kernel reads the JDE.INI on the Enterprise server to get the user and password (PSFT/PSFT) needed to access the database.
4. The user and password (PSFT/PSFT) is used as a "bootstrap" to access the F98OWSEC and F98OWPU tables to find the database system ID and password assigned to the E1 user attempting to login.

Oracle Internal & OAI Use Only

5. The assigned system ID and password assigned to the user is returned to the virtual client in an encrypted format

Oracle Internal & OAI Use Only

Describing User Security (continued)

User Security and CNC Validation

This diagram shows user security with CNC validation:

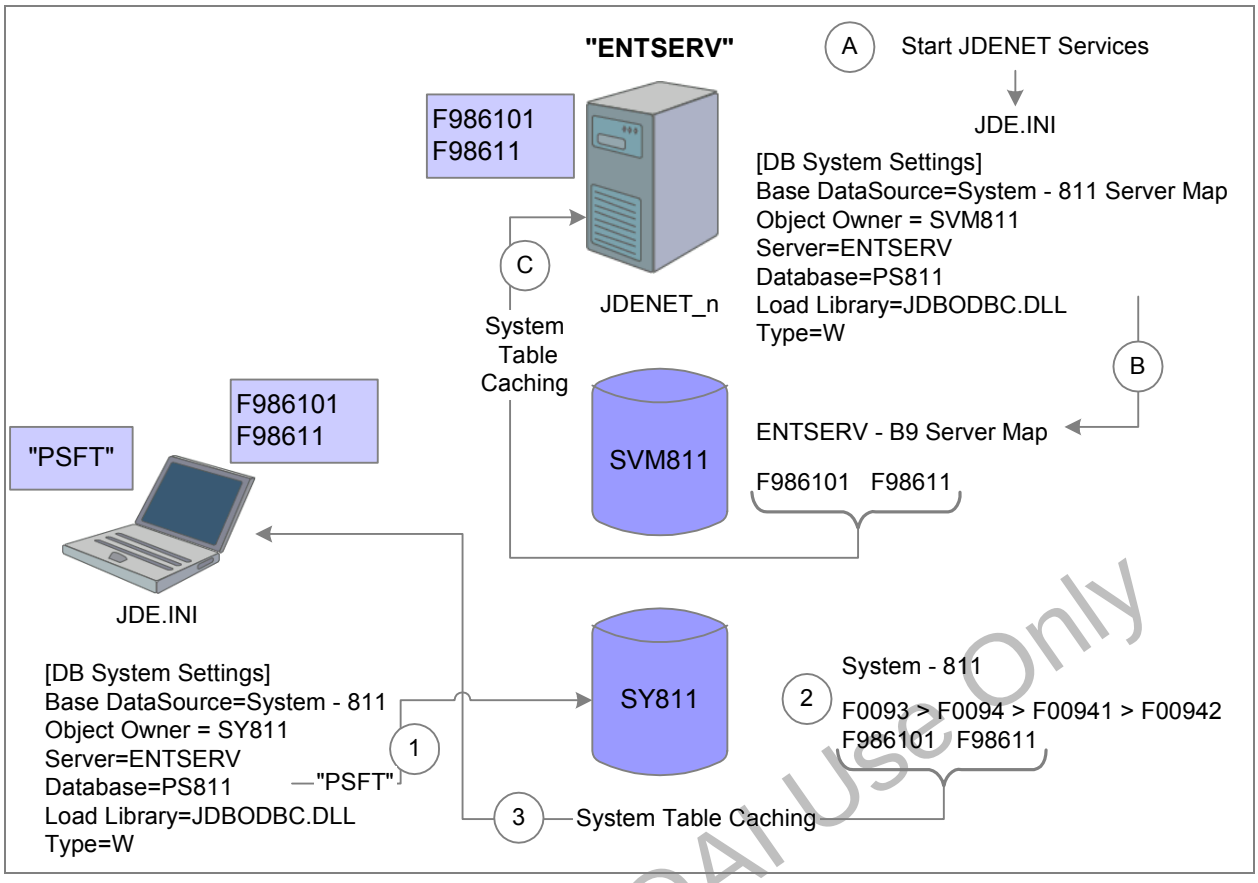

Slide 95

Student Notes

CNC Validation Process

The CNC Validation Process for user security includes these steps:

1. When a user signs in to the workstation, the system reads the local JDE.INI file and accesses the DB System Settings stanza to determine the name of the enterprise server and the corresponding database data source information.
2. The system accesses the database to locate the F986101 and F98611 tables, which are the system tables.
3. The system caches the tables to the workstation.
4. When the services start, the system caches the system tables to the enterprise server.
5. The system reads the JDE.INI file to determine the database data source information.

Oracle Internal & OAI Use Only

6. The system accesses the database to locate the F986101 and F98611.
7. The system caches the tables to the enterprise server.

Oracle Internal & OAI Use Only

Describing Data and Logic Requests

Data and Logic Request Flow

This diagram shows the data and logic request:

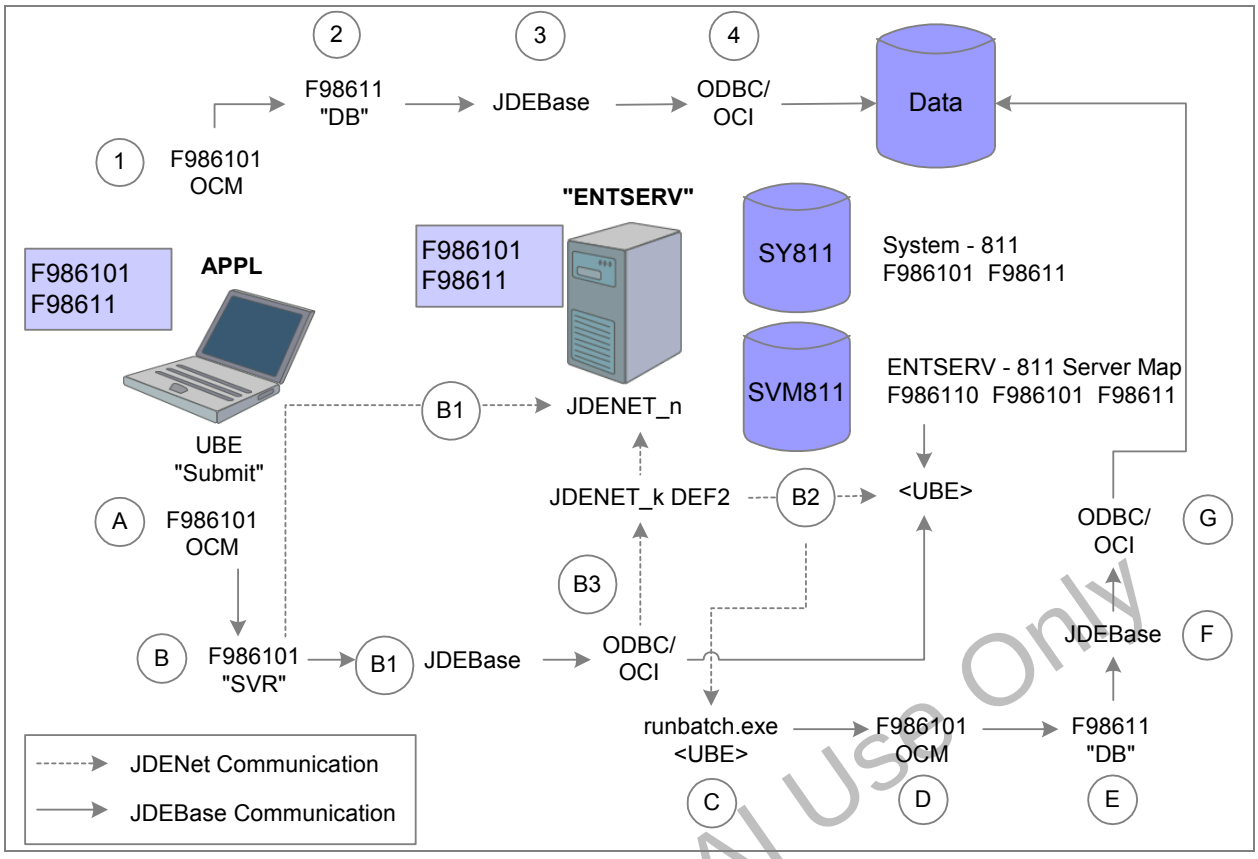

Slide 96

Student Notes

Data and Logic Requests

The top half of the diagram and the numbered steps depict what happens when a user searches for information within EnterpriseOne. For example, a user might be in the address book application looking for a particular customer's mailing information.

The bottom half and the lettered steps depict what happens when a user makes a logic request, such as running a batch program. For example, a user might want to print address labels for a particular group of employees.

Oracle Internal & OAI Use Only

Review

In this lesson, you learned that:

- Middleware is a mechanism that bridges multiple protocol and multiple vendor issues.
- JDENET provides communication middleware that performs the connections from client to server and server to server.
- JDEBASE provides database middleware using APIs for multiple database access.

Slide 97

Student Notes

Additional Resources

This table lists additional resources that provide more details about the topics that we discussed in this lesson:

Topic	*Cross Reference*
Middleware	*PeopleSoft EnterpriseOne 8.94 Configurable Network Computing Implementation PeopleBook*, "Middleware"
JDENET and iSeries Servers	*PeopleSoft EnterpriseOne 8.94 Server and Workstation Administration PeopleBook,* "Server Administration - iSeries"
JDENET and UNIX Servers	*PeopleSoft EnterpriseOne 8.94 Server and Workstation Administration PeopleBook*, "Server Administration for Unix and Linux"
JDENET and Windows Servers	*PeopleSoft EnterpriseOne 8.94 Server and Workstation Administration PeopleBook,* "Server Administration - Windows"

Oracle Internal & OAI Use Only

Notes

Oracle Internal & OAI Use Only

Lesson 8

Describing a Typical CNC Setup

Objectives

By the end of this lesson, you will be able to describe a typical customer configuration.

Slide 99

Student Notes

Oracle Internal & OAI Use Only

Describing a Typical Customer Configuration

The Complete Configuration

A complete configuration includes:

- Data
- Environments
- Central objects (path codes)
- Packages

Slide 100

Student Notes

Data

Data can include business data, control tables, data dictionary, pristine data, object librarian (data that all environments share), system (technical data that all environments share), test business data, test control tables, and versions.

Environments

The installation process defines the environments. They are PS811, PY811, DV811, and PD811. Each of the environments has a path code, purpose, and object mappings.

Central Objects

You should have individual sets of central objects or path codes for each of the above environments.

Packages

Packages are built for each of the individual path codes. Each path code should have two packages, an A and B version that you can alternate between when you build packages.

Oracle Internal & OAI Use Only

Describing a Typical Customer Configuration (continued)

Environment: PS811

PS811 path code:

- Contains pristine objects, which you do not modify because you can use them to compare if you make changes.
- Is for system administrator use only in case of disaster recovery or Global Support Center problem solving.

Slide 101

Student Notes

Pristine Environment

Use the PS811 environment to test pristine objects with PeopleSoft demonstration data. Also use this environment for training classes. You must have this environment to compare modified objects to pristine objects.

Disk Space

If space is a concern, it is possible to remove this environment because you can always get it back from the CD.

Oracle Internal & OAI Use Only

Describing a Typical Customer Configuration (continued)

Environment: PY811

PY811 path code:

- Is used in initial phases of implementation.
- Supports the prototype at client site.
- Is used for conversion of non-PeopleSoft tables.
- Is used to create UDCs.
- Is used for raw development.
- Is used to enter data that will become production data.
- Is used for future upgrades.

Slide 102

Student Notes

Data Issues

Depending on how many people are supporting the site, you could have multiple people adding to this environment. For example, someone could be converting legacy data, while someone else adds UDCs and menus. If you play around, you could delete or corrupt someone else's data. Treat this environment as read only. You want to be sure that what gets entered here will make it into production.

Testing

After your enterprise is up and running, this environment can be used as a test environment for newly developed objects or custom modifications before they are deployed to production.

Oracle Internal & OAI Use Only

Describing a Typical Customer Configuration (continued)

Environment: DV811

DV811 path code:

- Is used for custom development.
- Is not needed if no long-term development will take place.

Slide 103

Student Notes

Development Environment

Use this environment to develop new objects without disturbing your production users. If you're not doing any custom modifications or development, you don't need this environment. After developing in this environment, objects can be transferred to the prototype environment for testing. Finally, they can be deployed to the production environment.

Oracle Internal & OAI Use Only

Describing a Typical Customer Configuration (continued)

Environment: PD811

PD811 path code:

- Is a live environment for production users.
- Is built from PY811 environment.
- Is empty at beginning of prototype.
- Contains data copied from PY811 after prototype testing is complete.

Slide 104

Student Notes

Production Environment

This environment is originally built from the prototype environment. All of the work done in prototype is usually copied into Production, which is then released to the production users. After this initial copy, prototype is not used much, except for Upgrade/Update purposes.

Oracle Internal & OAI Use Only

Describing a Typical Customer Configuration (continued)

Understanding Typical Data Sources

Discussion of available data sources includes:

- Purpose of each data source.
- Data source owner.

Slide 105

Student Notes

Data Source Location

When the enterprise server has Oracle Server or Microsoft SQL Server and is a more powerful machine than the deployment server, you can increase performance by putting all data sources (except the local data sources) on the enterprise server instead of the deployment server.

However, data sources can be distributed over multiple machines in an enterprise.

Oracle Internal & OAI Use Only

Describing a Typical Customer Configuration (continued)

Typical Data Sources

The typical data sources are:

Data Source	*Owner*	*Purpose*
Business Data - PROD	PRODDTA	Used for production business data.
Business Data - CRP	CRPDTA	Used to build production business data that will be copied to Business Data - PROD.
Business Data - TEST	TESTDTA	Used for test data entered during Prototype.
Business Data - PS811	PS811DTA	Contains pristine data shipped with EnterpriseOne and should never be changed.
Control Tables - PROD	PRODCTL	Contains master control tables for PD811 environment
Control Tables - Test	TESTCTL	Contains control tables used in test environment

Slide 106

Student Notes

Control Tables

The Business Data data sources are used to point to all of your business data. Each environment has its own set of business data. These data sources will point to the tables used for day-to-day business processes, such as those tables containing information regarding customers, purchasing, addresses, employees, and items stocked. Control Tables data sources are used to group all of the master control tables together. Some examples of control tables are the next number tables, user defined code tables, and task or menu tables.

Oracle Internal & OAI Use Only

Describing a Typical Customer Configuration (continued)

Typical Data Sources (continued)

The typical data sources are:

Data Source	*Owner*	*Purpose*
Control Tables - CRP	CRPCTL	Contains master control tables for PY811 environment.
Control Tables - PS811	PS811CTL	Contains master control tables for PS811 environment.
System - 811	SY811	Contains technical system tables that all workstations will use. All environments share this data source.
Data Dictionary - 811	DD811	Contains all data dictionary tables that all environments will use.
Object Librarian - 811	OL811	Contains one set of Object Librarian tables per release. All environments share this data source.

Slide 107

Student Notes

Access to System - 811

All machines must have access to the System - 811 data source, because workstations need it at startup for initialization information.

Data Dictionary - 811

Because only one data dictionary is shared across all environments, only one data dictionary data source is required.

Oracle Internal & OAI Use Only

Describing a Typical Customer Configuration (continued)

Typical Data Sources (continued)

The typical data sources are:

Data Source	*Owner*	*Purpose*
Central Objects - PD811	PD811	Central objects data source for PD811 path code.
Central Objects - DV811	DV811	Central objects data source for DV811 path code.
Central Objects - PY811	PY811	Central objects data source for PY811 path code.
Central Objects - PS811	PS811	Central objects data source for PS811 path code.
Versions - PD811	PD811	Versions data source for PD811 path code.
Versions - DV811	DV811	Versions data source for DV811 path code.
Versions - PY811	PY811	Versions data source for PY811 path code.
Versions - PS811	PS811	Versions data source for PS811 path code.

Slide 108

Student Notes

Two Sets of Central Object Specifications

PeopleSoft recommends that you have at least two sets of central object specifications if you're going to do development. This will enable you to copy from the other set of central objects if something undesirable should happen to one set.

Oracle Internal & OAI Use Only

Describing a Typical Customer Configuration (continued)

Typical Data Sources (continued)

The typical data sources are:

Data Source	*Owner*	*Purpose*
Machine name - 811 Server Map	SVM811	Contains technical system tables from the server's perspective. There must be a server map defined for every logic server.
Control Tables Local, System Local, Data Dictionary Local, Object Librarian Local, and Versions Local	MSDE database DBO	Only used by Planner and Deployment environments.
LOCAL (SVR)	No object owner	Defines workstation to EnterpriseOne 8.11 as a logic-processing device. Used to execute reports locally.
MACHINE (SVR)	SVM811	Defines the logic server. There must be a machine data source defined for every logic server.
MACHINE - Logic	SVM811	Defines a machine on which logic is run. Used to map to that machine when running batch applications.

Slide 109

Student Notes

Machine Name - 811 Server Map

Each enterprise will have at least one *machine* and *machine* - 811 Server Map data source. This allows users to submit processing to the enterprise or logic servers instead of having everything run locally. You must have a set of these data sources for every machine that will run logic (except LOCAL).

LOCAL Data Source

LOCAL is a logic data source, which identifies a machine that logic can run on. Even though you may have 500 workstations in your enterprise, you'll only need one LOCAL definition, since it always points to the local machine.

Oracle Internal & OAI Use Only

Review

In this lesson, you learned that the typical customer configuration contains specific environments and path codes used for development, testing, pristine data, and production.

Slide 110

Student Notes

Additional Resources

This table lists additional resources that provide more details about the topics that we discussed in this lesson:

Topic	*Cross Reference*
Typical Customer Configuration	*PeopleSoft EnterpriseOne Configurable Network Computing Implementation 8.94*, "Typical Customer Configuration"

Oracle Internal & OAI Use Only

Lesson 9

Final Course Activity

Objective

By the end of this lesson, you will be able to complete the configuration and mappings for a single enterprise server and an additional HP9000 server.

Slide 112

Student Notes

Oracle Internal & OAI Use Only

Activity 7: Using Distributed Processing

In this activity, you will review the activity overview and:

- Complete the configuration and mappings for a single enterprise server.
- Complete the configuration and mappings for an additional HP9000 server.

See *CNC Foundation: Activity Guide,* lesson 9, "Final Course Activity," Activity 7: Using Distributed Processing.

Slide 113

Student Notes

Oracle Internal & OAI Use Only

Lesson 10

Course Review

Completed Objectives

In this course, you learned how to:

- Describe Configurable Network Computing (CNC).
- Implement the elements of CNC.
- Demonstrate competence in CNC architecture.

Slide 115

Student Notes

Oracle Internal & OAI Use Only

Describing CNC

The CNC Foundation

The following are the key points of CNC:

- CNC is the technical architecture for PeopleSoft EnterpriseOne software.
- CNC allows highly configurable, distributed applications to run on a variety of platforms without users or analysts needing to know which platforms or which databases are involved in any given task.
- CNC insulates the business solution from the underlying technology so that enterprises can create and adopt new technologies without rewriting applications.

Slide 116

Student Notes

Oracle Internal & OAI Use Only

Implementing the Elements of CNC

Elements of CNC

The following elements make up CNC:

- Object storage in several formats: central objects, runtime objects, and serialized objects.
- Environments for production, pristine, prototype and test activities.
- Path codes, which associate a set of C components in a directory path and a set of object specifications.
- Object Configuration Manager (OCM), which allows distributed data and logic processing by keeping track of where data resides and where processing occurs.
- Data sources, which define databases that store data and machines on which to execute logic.
- Object deployment, which can be done by creating packages for servers and workstations.

Slide 117

Student Notes

Oracle Internal & OAI Use Only

Demonstrating Competence in CNC Architecture

CNC Architecture

A typical customer configuration:

- Should follow the PeopleSoft-recommended setup and naming standards.
- Includes data, environments, central objects and packages.

Slide 118

Student Notes

Oracle Internal & OAI Use Only

Appendix A

PeopleSoft EnterpriseOne Curriculum Map

To view the PeopleSoft courses and learning paths, please visit:
http://education.oracle.com/

Oracle Internal & OAI Use Only

Oracle Internal & OAI Use Only

Appendix B

Applying CNC Concepts

Configuration and Mappings Worksheets

This Appendix provides the worksheets for the final activity.

Configuration One

OCM Master F986101 for Configuration One					
Action	***ENV***	***TYPE***	***NAME***	***USER/Role***	***DATA SOURCE***
A					
B					
C					
D					
E					
F					
G					
H					

Data Source Master F98611 for Configuration One								
ACTION	***DATA SOURCE***	***USE***	***TYPE***	***OWNER***	***DATABASE***	***ODBC DATASOURCE / DATABASE (TNS)***	***SERVER***	***PORT***
A								
B								
C								
D								
E								

Oracle Internal & OAI Use Only

F								
G								
H								

Configuration Two

OCM Master F986101 Configuration Two					
Action	***ENV***	***TYPE***	***NAME***	***USER/Role***	***DATA SOURCE***
A					
B					
C					

Data Source Master F98611 for Configuration Two								
ACTION	***DATA SOURCE***	***USE***	***TYPE***	***OWNER***	***DATABASE***	***ODBC DATASOURCE / DATABASE (TNS)***	***SERVER***	***PORT***
A								
B								
C								

Oracle Internal & OAI Use Only